S
621.31
E20ced
1974
V.2

DRAFT ENVIRONMENTAL IMPACT STATEMENT ON COLSTRIP ELECTRIC GENERATING UNITS 3 & 4, 500 KILOVOLT TRANSMISSION LINES & ASSOCIATED FACILITIES

VOLUME TWO METHODOLOGY, NEED AND ALTERNATIVES

ENERGY PLANNING DIVISION, MONTANA STATE DEPARTMENT OF NATURAL RESOURCES AND CONSERVATION

HELENA, MONTANA 59601

NOVEMBER, 1974

DATE DUE

MSU DEC 2 4 '75

MSU FEB 1 1 1976

APR 9 '80

May 7 80

June 11, 80

NOV 2 6 2003

MONTANA STATE LIBRARY
S 621.31 E20ced 1974 c.1 v.2
Draft environmental impact statement on
3 0864 00050251 1

NRIS #106

STATE DOCUMENTS

DEC 4 1974

DRAFT ENVIRONMENTAL IMPACT STATEMENT ON

THE PROPOSED MONTANA POWER COMPANY, PUGET SOUND POWER & LIGHT COMPANY, PORTLAND GENERAL ELECTRIC COMPANY, PACIFIC POWER AND LIGHT COMPANY, AND WASHINGTON WATER POWER COMPANY, COLSTRIP ELECTRIC GENERATING UNITS 3 & 4, 500 KILOVOLT KV TRANSMISSION LINES FROM COLSTRIP TO HOT SPRINGS, MONTANA, AND ASSOCIATED FACILITIES

PLEASE RETURN

ENERGY PLANNING DIVISION
ALBERT C. TSAO, ADMINISTRATOR
DEPARTMENT OF NATURAL RESOURCES & CONSERVATION
GARY J. WICKS, DIRECTOR

NOVEMBER, 1974

MONTANA STATE LIBRARY
930 East Lyndale Avenue
Helena, Montana 59601

SUMMARY OF CONTENTS

Volume 1 Summary

Volume 2 Methodology, Need and Alternatives

Chapter One	Introduction
Chapter Two	Governmental Units Involved
Chapter Three	Methodology
Chapter Four	The Need for the Proposed Facility
Chapter Five	Alternative Electricity Sources
Chapter Six	Alternative Coal-Fired Plant Sites
Chapter Seven	Power Plant System Alternatives

Volume 3A Power Plant

Chapter Eight	Colstrip Project Power Plant Complex
Chapter Nine	Coal Mining Activities
Chapter Ten	Colstrip Site Inventory and Analysis

Volume 3B Power Plant

Chapter Eleven	Colstrip Site Impact Analysis
Chapter Twelve	Long-Term Impact Considerations and Information Dissemination

Glossary

Bibliography

Credits and Acknowledgements

Volume 3B Power Plant Appendixes

Volume 4 Transmission Line

Chapter One Introduction and Methodology

Chapter Two Need of the Proposed Transmission Line

Chapter Three Alternative Transmission Technology

Chapter Four Transmission Line Design Criteria and Specification Analysis

Chapter Five Study Area Inventory and Analysis

Chapter Six Study Area Impact Analysis

Chapter Seven Long-Term Impact Considerations and Information Dissemination

Glossary

Bibliography

Appendixes

Credits and Acknowledgements

Volume 2

TABLE OF CONTENTS

Chapter One Introduction

1.1 The Application

1.2 Objectives and Potential Results of This Study

1.3 Action Taken by the Energy Planning Division

1.3.1 Methodology Development

1.3.2 Internal Organization

1.3.3 Contacts

1.3.3.1 Department of Fish and Game

1.3.3.2 Department of Health

1.3.3.3 Department of Intergovernmental Relations

1.3.3.4 University of Montana (Botany Department)

1.3.3.5 Department of Social and Rehabilitation Services

1.3.3.6 Department of Natural Resources and Conservation (Water Resources Division)

1.3.3.7 Public Service Commission

1.3.3.8 Montana State University (Economics Department)

1.3.3.9 Harza Engineering Company

1.3.3.10 Battelle Pacific Northwest Laboratories

1.3.3.11 Individual Contracts

Chapter Two Governmental Units Involved

2.1 Federal

2.1.1 General Laws

2.1.1.1 National Environmental Policy Act (NEPA)

2.1.1.2 Clean Air Act

2.1.1.3 Water Pollution Control Act

2.1.1.4 Specially Managed Areas

2.1.2 Army Corps of Engineers (Corps)

2.1.3 U.S. Forest Service (USFS)

2.1.4 Bureau of Land Management (BLM)

2.1.5 Bureau of Indian Affairs (BIA)

2.1.6 Bureau of Reclamation (BR)

2.1.7 Bonneville Power Administration (BPA)

2.2 State

2.2.1 General Laws

2.2.1.1 Montana Constitution

2.2.1.2 Montana Environmental Policy Act (MEPA)

2.2.1.3 Montana Administrative Procedure Act (APA)

2.2.2 Department of Natural Resources and Conservation

2.2.2.1 Energy Planning Division

2.2.2.2 Water Resources Division

2.2.2.3 Forestry Division

2.2.3 Department of Health and Environmental Sciences

2.2.3.1 Air Quality Bureau

2.2.3.2 Water Quality Bureau

2.2.3.3 Solid Waste Management Bureau

2.2.3.4 Occupational Health Bureau

2.2.4 Department of State Lands

2.2.4.1 Easements Across State-Owned Lands

2.2.4.2 Leases of State-Owned Lands and Minerals

2.2.4.3 Reclamation Division

2.2.5 Department of Fish and Game

2.2.6 Department of Highways

2.2.7 Public Service Commission

2.3 Local Laws

2.3.1 City

2.3.2 County

2.3.3 Conservation Districts

Chapter Three Methodology

Chapter Four The Need for the Proposed Facility

4.1 Historic Electric Consumption

4.1.1 Northwest Energy Pool Area

4.1.2 Applicants' Service Districts

4.1.2.1 Puget Sound Power and Light Company

4.1.2.2 Portland General Electric Company

4.1.2.3 Pacific Power and Light Company

4.1.2.4 Washington Water Power Company

4.1.2.5 Montana Power Company

4.2 Projecting the Demand for Electricity

4.2.1 The Importance of Accurate Projections

4.2.2 The Projection Used

4.2.3 Projections for the Northwest Power Pool Area

4.2.4 Projections for the Applicant Companies

4.2.4.1 Puget Sound Power and Light Company

4.2.4.2 Portland General Electric Company

4.2.4.3 Pacific Power and Light Company

4.2.4.4 Washington Water Power Company

4.2.4.5 Montana Power Company

PLEASE RETURN

4.3 Historical Projections (Will the Future Conform to the Past?)

4.3.1 Changing Causal Factors in Montana

4.3.1.1 Population Growth

4.3.1.2 Effects of Increased Price of Electricity

4.3.1.3 The Rate of Economic Growth

4.3.1.4 Prices of Alternative Energy Sources

4.3.1.5 Conclusion

4.4 Promotion and Conservation

4.4.1 Advertising

4.4.2 Conservation

4.5 Need: Conclusion

4.5.1 Projected Consumption Compared to Present and Projected Capability

4.5.1.1 Montana Power Company Consumption and Capability

Chapter Five Alternative Electricity Sources

5.1 Criteria for Electrical Energy Source Selection

5.2 Available Existing Electricity Sources

5.2.1 Nuclear Fission Power Plants

5.2.2 Hydroelectric Power Plants

5.2.3 Coal-Fired Power Plants

5.2.4 Gas/Oil Turbine Units

5.2.5 Geothermal Power Plants

5.2.6 Nuclear Breeder Reactors

5.2.7 Solar Power

5.2.8 Wind Power

5.2.9 Tidal Power

5.2.10 Magnetohydrodynamics (MHD)

5.2.11 Fusion Power

Chapter Six Alternative Coal-Fired Plant Sites

6.1 Comparisons of Alternative Costs; Coal Shipment Versus Electric Power Transmission

6.1.1 Cost Comparison Background

6.1.2 Costs of Service to the Consumer

6.1.2.1 Introduction

6.1.2.2 Cost Comparisons

6.1.3 Costs to the Applicants

6.1.3.1 The Costs Compared

6.1.4 Cost Comparison Made by the Applicants

6.1.4.1 Reconstruction of the Applicants' Analysis

6.1.5 Comparative Cost Conclusions

6.2 Beyond Comparison of Costs; The Possibility of Coal Shipment and Impacts

Chapter Seven Power Plant System Alternatives

7.1 Alternative Plant Technologies

7.1.1 Alternative Cooling Systems

7.1.1.1 Once Through Cooling

7.1.1.2 Cooling Pond

7.1.1.3 Spray Ponds

7.1.1.4 Natural Draft Evaporative Cooling Tower

7.1.1.5 Mechanical Draft Evaporative Cooling Tower

7.1.1.6 Dry Cooling Tower

7.1.1.7 Hybrid Wet-Dry Cooling Tower

7.1.1.8 Combined Dry Tower - Cooling Pond

7.1.2 Alternative Emission Control Systems

7.1.2.1 Hot Electrostatic Precipitators

7.1.2.2 Wet Electrostatic Precipitators

7.1.2.3 Bag Filters

7.1.2.4 Centrifugal Separators

7.1.2.5 Boiler Injection Sulfur Removal Systems

7.1.2.6 Sulfur Recovery Systems

7.1.2.7 Wet Alkali Scrubbers

CHAPTER ONE Introduction

The Utility Siting Act was passed in March 1973 to regulate the construction and operation of certain utility facilities in Montana. The Montana Department of Natural Resources and Conservation (Department or DNRC) was assigned the responsibility of administering this Act, and, by order of the Department Director, the Energy Planning Division of the Department was created to assume this responsibility.

1.1. The Application

In accordance with the Siting Act, an application was filed with the Department on June 6, 1973, for permission to construct two 700 megawatt (MW) electrical generating units (Units 3 and 4) to be located at Colstrip, Montana; the associated facilities of the units; and two 500 kilovolt (KV) transmission lines with accompanying terminal equipment extending from Colstrip to Hot Springs, Montana. All of these will hereafter be referred to as the Colstrip Project.

The five utility companies which applied jointly for the Colstrip Project are Montana Power Company, 30% ownership; Puget Sound Power and Light Company, 25% ownership; Portland General Electric Company, 20% ownership; The Washington Water Power Company, 15% ownership; and Pacific Power and Light Company, 10% ownership.

The proposed location of Units 3 and 4 is east of Colstrip in Section 34, T2N, R41E, Rosebud County (see locator map included in this section). According to the application, the units would each contain a steam generator capable of producing approximately 5,000,000 pounds of steam per hour. Each unit would also have a 700 MW turbine generator, an evaporative, cross-flow induced draft cooling tower, a stack at least 500 feet in height, and alkali scrubbers for air pollution control. The units would each require approximately 885,000 to 903,000 pounds of coal per hour depending on the coal's BTU content. It is proposed that this coal be obtained by strip mining from a nearby area at the rate of approximately 130 surface acres per year. The accompanying photographs show an aerial view of Colstrip and the power plant site where Units 1 and 2 are presently under construction.

The units' associated facilities include a 36" pipeline which would draw 26,000 acre feet (maximum consumption) of water per year, or about 37 cubic feet per second (cfs), from the Yellowstone River. This line would extend approximately 30 miles from the river at Nichols to the plant site. Sixty surface acres of land in the general area of the power plant would be required for settling ponds for the water.

The proposed electric transmission system consists of two 500 KV lines. One line would be constructed over the entire distance from Colstrip to Hot Springs, approximately 430 miles. The other 500 KV line would be created by converting a proposed double-circuit 230 KV line (not yet constructed) from Colstrip to Billings to 500 KV capacity, and constructing a second new 500 KV line, connected to the newly converted line at Billings, from Billings to Hot Springs. The applicants have submitted one preferred and several alternative corridors which these lines could follow. A substation for transforming,

STATE OF MONTANA

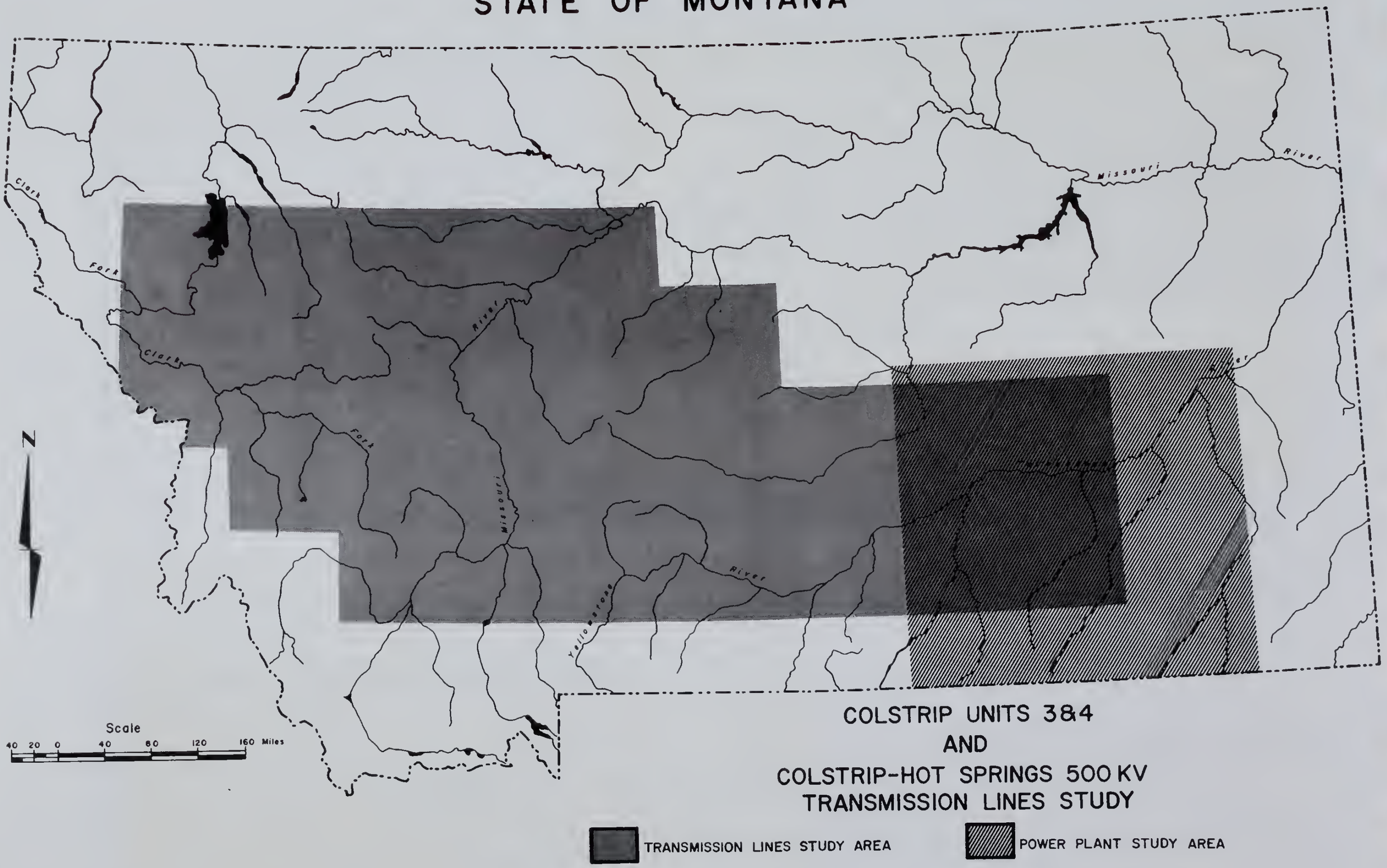

Aerial View of
Colstrip

Power Plant Site

switching, and relaying the power carried by the lines has been proposed in the Broadview area, and a substation for switching and relaying of power is proposed for the Helena area.

Detailed analyses of all aspects of the power plant and transmission line components are provided in subsequent volumes of this impact statement.

1.2. Objectives and Potential Results of This Study

This environmental impact statement is the product of a study conducted by the Energy Planning Division to evaluate the proposed facilities and their probable effects on the surrounding natural and cultural environment.

A primary objective of this study is to provide the basis for the Department's recommendations concerning the project to the Board of Natural Resources and Conservation. The Board has the authority to make a final decision on the project, based on certain criteria outlined in the Utility Siting Act. The application may be approved or denied as filed, or the project may be approved upon such terms, conditions, or modifications of the construction, operation or maintenance of the facility as the Board may deem appropriate. It is, therefore, one objective of this study to provide a thorough analysis and examination of all criteria required for the decision-making process. These criteria are explained in the study methodology discussion presented in Chapter Three.

A second objective of this study is to document the manner and the magnitude of the probable impacts of the Colstrip Project in order to fulfill the requirements of the Montana Environmental Policy Act and the National Environmental Policy Act.

1.3. Action Taken by the Energy Planning Division

1.3.1. Methodology Development

As science and technology improve and population increases, human activities (such as power plant construction and suburban development) become more and more complicated and may conflict with each other. Activities which misuse land or lack adequate planning and control may, although occupying only a small land area, nevertheless trigger a series of interlocked reactions which affect other activities. Thus, it is becoming increasingly necessary to have planning and constraints.

Human activities are often contradictory in many aspects, and no single academic discipline or theory can be expected to explain all aspects of the realm of activities. Neither can any discipline or theory serve as a comprehensive guide to policy formation or land use planning procedures (i.e., one theory may solve the problems related to one academic field, but may leave the problems related to other fields untouched or in even worse condition). For instance, a well-designed industrial plant may achieve operational reliability and reduced installation costs, but may not solve (and may worsen) the problems

related to local community economics and social issues.

Therefore, to date, substantial agreement has been reached concerning a "multidisciplinary approach" to any type of land use and resource planning. Above all, special emphasis has been placed upon establishing a methodological framework. Land use and resource planning is an extremely complex task, not only involving the natural environment, but also dealing with economic and social systems. Furthermore, it requires design skill, utilizing psychophysiological criteria as design and construction standards in order to build accommodations for socioeconomic activities within a given natural environment. All of these concerns must also interact in the context of time. The detailed study methodology of this project is explained in Chapter Three.

1.3.2. Internal Organization

In order to fulfill the responsibility of administering the Utility Siting Act, the Energy Planning Division has been organized as a multidisciplinary team and divided into three bureaus which handle the major areas of analyses needed to process a utility application. The Utility Engineering Bureau examines the design and operational characteristics of a proposed utility facility, and compares other potential sources of energy and other technologies with the ones that are proposed. The responsibilities of the Cultural Sciences Bureau include conducting inventory and impact analyses of social and economic factors and land uses which would be affected by the proposed facility. The Utility Engineering Bureau and the Cultural Sciences Bureau jointly investigate the basis of need for the proposed facility. The Natural Sciences Bureau conducts investigations of natural elements which would be affected, such as geology, hydrology, soils, vegetation, wildlife and meteorology. A detailed illustration of the Division's organizational structure is shown in the diagram on the following page.

For all types of proposed utility facilities, the information collectively gathered by the three bureaus is ultimately used to formulate the Department's recommendations on the project, which are presented to the Board. Close interaction among the Division staff is essential during the entire study period.

1.3.3. Contracts

Parts of this study fall within other state agencies' or consultants' areas of expertise. Therefore, contracts were made to utilize this expertise and assist the Energy Planning Division in fulfilling the requirements of the Utility Siting Act. Each state agency may also utilize this opportunity to fulfill its own Colstrip Project-related responsibilities as defined by law. The relevant laws which each agency administers are discussed in Chapter Two. The contracts require each agency or consultant to establish baseline data or inventory existing conditions and subsequently evaluate the impacts which would result from construction and operation of the Colstrip Project. Provisions are also made for each agency to submit recommendations with the study results. A summarization of the contracts

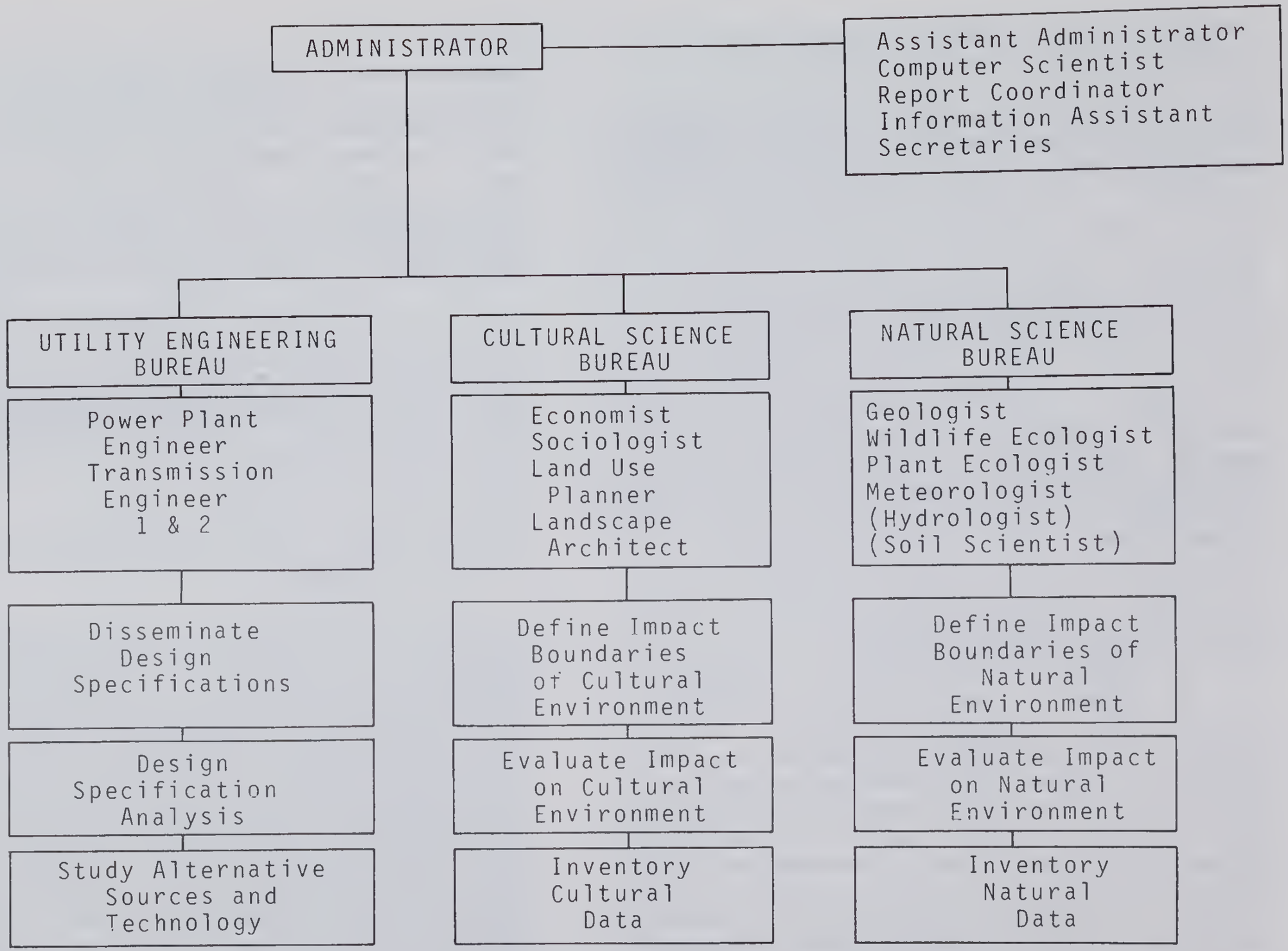
ADMINISTRATOR
Assistant Administrator
Computer Scientist
Report Coordinator
Information Assistant
Secretaries
UTILITY ENGINEERING BUREAU
Power Plant Engineer
Transmission Engineer 1 & 2
Disseminate Design Specifications
Design Specification Analysis
Study Alternative Sources and Technology
CULTURAL SCIENCE BUREAU
Economist
Sociologist
Land Use Planner
Landscape Architect
Define Impact Boundaries of Cultural Environment
Evaluate Impact on Cultural Environment
Inventory Cultural Data
NATURAL SCIENCE BUREAU
Geologist
Wildlife Ecologist
Plant Ecologist
Meteorologist
(Hydrologist)
(Soil Scientist)
Define Impact Boundaries of Natural Environment
Evaluate Impact on Natural Environment
Inventory Natural Data

is presented below.

1.3.3.1. Department of Fish and Game

A. Power Plant - Related

The Department of Fish and Game was given the task of investigating three basic areas of concern: the aquatic ecosystem of the Yellowstone River, with quantitative temperature and flow data; the game and nongame wildlife resources and habitat in the study area; and the recreational-historical aspects of the study area, including existing facilities and sites, as well as areas of future development potential and adequacy.

B. Transmission Line - Related

The scope of work for this study consisted of inventorying and evaluating transmission line impacts on the following: scenic and aesthetic aspects of the environment; wildlife density, distribution, movements, habitat requirements, and habitat condition; identification of rare or endangered animal species; important cultural, historical, and archaeological features; and recreational opportunities and potential recreation development plans. Provision was also made for evaluation of transmission line impacts on water resources in terms of aquatic and animal life and wetland ecosystems.

1.3.3.2. Department of Health

A. Air Quality Bureau

This study included establishing background air quality data for specified pollutants and background meteorological-climatic data in the power plant study area. These pre-operational baseline data and the amounts and types of emissions which would result from plant operations were incorporated into a diffusion model to obtain indications of the emission impact on air quality. The diffusion model was based on dispersion coefficients which represent the standard deviations of vertical and horizontal wind fluctuations in the Colstrip area. The results of this model were also used to evaluate the emission impact on soil, native vegetation, crops, wildlife, livestock, and water quality. Visibility and solar radiation were also evaluated.

B. Water Quality Bureau

The Water Quality Bureau was contracted to evaluate ground water and surface water in terms of the impact of projected wastes and air emissions from Units 3 and 4. Because power plant wastes may have both localized effects and regional or basin-wide effects, studies were required to assess the effect of wastes on local streams as well as the more distant effects which air emissions from the plants' stacks may have on regional water quality.

C. Occupational Health Bureau

If Units 3 & 4 are constructed, some amount of radioactive material will be emitted from the stacks. Thus, it is important to establish baseline data concerning existing radioactivity levels in the surrounding environment prior to the operation of the proposed project. Various types of radioactivity analyses were needed for air,

soil, vegetation, water (both natural streams and private and municipal water supplies), and coal. The Occupational Health Bureau was contracted to collect necessary samples, conduct the analyses, and evaluate the potential radiation impacts.

1.3.3.3. Department of Intergovernmental Relations

This contract provided for an analysis of economic and governmental impacts of the Colstrip Project, with special emphasis on taxes. Tax returns from the project to local, county and state governments were categorized. The time schedule of taxes throughout portions of the life of the project, past trends in tax sources and amounts, and timing and magnitude of needs for increased revenues to provide expanded community services were examined. Potential influences on the availability of funds (e.g., bonding capability of local governments) were also considered.

1.3.3.4. University of Montana (Botany Department)

This contract was formulated to obtain data concerning pre-plant operation concentrations of sulfur, fluoride, and other chemical compounds or trace elements in indigenous plants and animals in the study area. The selection of particular compounds and elements for study was based on the types of power plant emissions which could cause damage to terrestrial life. A further aspect of the study was determination of baseline chemical characteristics of precipitation in the study area prior to power plant operation. All of the above data were evaluated to identify 1) what concentration levels of the selected elements and compounds cause no visible or apparent damage to flora and fauna; and 2) the time (in the future) that airborne emissions from Colstrip would begin to adversely affect species of flora and fauna in the study area.

1.3.3.5. Department of Social and Rehabilitation Services

The Department of Social and Rehabilitation Services has conducted three sociological studies through subcontracts to the University of Montana and Montana State University (MSU). These studies document existing social conditions and evaluate potential social impacts of power plant construction and energy-related development.

Population projections were made to determine the size of population likely to result from construction and operation of Units 3 & 4. The projections considered both the time of arrival and the composition of increased population.

Basic social institutions, social processes and social organization of the area were studied to document existing conditions. Accordingly, the impact on local lifestyles of large numbers of newcomers associated with energy development has been predicted.

Another aspect of the sociological research was an assessment of existing community services and facilities. This information was then considered to determine which additional services would

be required by increased population, and what effects the increased population would have on service delivery systems.

1.3.3.6. Department of Natural Resources and Conservation(Water Resources Division)

The Water Resources Division of the Department of Natural Resources and Conservation conducted a study of streamflow and water use data in the Colstrip area, primarily of the Yellowstone River, but including other streams and ground water. Water use categories examined included rural-domestic, municipal, industrial, irrigation, and livestock. An impact assessment of the effects of water withdrawal on the Yellowstone River was also made.

1.3.3.7. Public Service Commission

The Department of Public Service Regulation was contracted to make a three-part study on the impact which Units 3 and 4 would have on electricity consumer rates in Montana, the availability of natural gas for Montana, and the feasibility of unit train coal transport as an alternative to mine mouth generation. This latter aspect of the study examines possible load center generation at Spokane, Washington, served by unit train from Colstrip as an alternative to Units 3 and 4.

1.3.3.8. Montana State University (Economics Department)

This study is an examination of background material pertaining to future demand for electricity in the Pacific Northwest. It includes a review of recent studies on the price of electricity, demand for electricity, interpretation of past price-quantity relationships together with the implications for future electricity consumption, and a regional comparison of electricity rates and prices.

1.3.3.9. Harza Engineering Company

Harza Engineering Company was contracted to study the transmission system stability and reliability for the proposed Colstrip to Hot Springs 500 KV system and for other practical alternatives to the proposed system. Existing Montana Power Company (MPC) and Western Systems Coordinating Council transmission data, load flow and stability programs, and the MPC 25-year long range plan were also examined.

1.3.3.10. Battelle Pacific Northwest Laboratories

The objective of this contract was to provide an independent assessment of the state of technology of power plant SO_2, particulate, fluorides, and trace elements emission control systems. This assessment is considered in terms of the ability of existing technology to produce such systems for Units 3 and 4 of sufficient

performance, operability, life expectancy and dependability as required of power plant equipment.

1.3.3.11. Individual Contracts

Several individuals were contracted to conduct special studies in their areas of expertise.

Dr. Stan Anderson, Electrical Engineering Professor at the Illinois Institute of Technology, coordinated all of the studies done by Harza Engineering Company (described above).

Dr. Frank McCandless, Associate Professor of Mechanical Engineering at MSU, was contracted to develop detailed qualitative and quantitative flow diagrams for the fuel and chemicals consumed by Units 3 and 4.

Dr. Ralph Powe, Professor of Mechanical Engineering at MSU, has conducted special projects such as dry cooling studies, heat rejection alternatives for Units 3 and 4, and air and water input-output analyses.

CHAPTER TWO Governmental Units Involved

Various aspects of the proposed Colstrip project fall under the jurisdiction of a number of federal, state and local governmental units by virtue of generally applicable laws, specific statutory authorizations and established administrative rules. The most relevant legal considerations are discussed herein, although the treatment is not exhaustive.

2.1. Federal

2.1.1. General Laws

Federal agencies must comply with basic federal legislation in all activities relating to environmental management and certain aspects of land use.

2.1.1.1. National Environmental Policy Act (NEPA)

The National Environmental Policy Act of 1969 (42 U.S.C. §4321, et seq.) establishes a national policy to "encourage productive and enjoyable harmony between man and his environment," promote "efforts which will prevent or eliminate damage to the environment and biosphere," and "enrich the understanding of the ecological systems and natural resources important to the Nation" (42 U.S.C. §4321(2)). All federal agencies are directed to carry out this policy in planning and decision-making activities, which include the preparation of environmental impact statements concerning any proposed action which may significantly affect the environment. Many provisions of the Montana Environmental Policy Act, which is discussed in Section 2.2.1.2., are modeled after those of NEPA.

2.1.1.2. Clean Air Act

The Federal Clean Air Act (42 U.S.C. §1857 et seq.) gives the primary responsibility to the states for assuring that national primary and secondary ambient air quality standards will be achieved and maintained. The states are required to submit pollution control plans and standards for approval of the Environmental Protection Agency (EPA) (42 U.S.C. §1857C-5). While state enforcement plans are accepted (42 U.S.C. §1857C-7), the EPA itself may enforce any state implementation plan (42 U.S.C. §1857C-8). Montana's air pollution control program is discussed in Volume 3b, Appendix A3.

2.1.1.3. Water Pollution Control Act

The policy of the Federal Water Pollution Control Act (33 U.S.C. §1251 et seq.) is that discharge of pollutants into navigable waters be eliminated by 1985. The Act recognizes and maintains the states' responsibility to "prevent, reduce and eliminate pollution" (33 U.S.C. §1251) and allows states to assume primary jurisdiction by adopting regulations meeting the standards in the Act.

Montana has adopted rules (M.A.C. Rule 16-

2.14(10)-S 14460, et seq.) pursuant to the state water pollution control statutes (Section 69-4801, et seq., R.C.M. 1947) which allow transfer of jurisdiction from the EPA to the state. Discharge of pollutants is controlled through a permit system administered by the Department of Health and Environmental Sciences. The Montana Water Quality Standards are given in Volume 3b, Appendix B1, of this impact statement.

2.1.1.4. Specially Managed Areas

Certain areas which must be protected by all federal agencies have been established under two laws, the National Wilderness Preservation Act of 1964 (16 U.S.C. §1131 et seq.) and the Wild and Scenic Rivers Act of 1968 (16 U.S.C. §1271 et seq.).

The Wilderness Act sets aside designated lands to preserve and protect their natural condition and wilderness character. Roads, motorized vehicles, structures and installations are prohibited. The only exceptions involve (1) facilities which could be built in compliance with existing mining laws, or (2) special Presidential authorization to construct facilities needed in the public interest (16 U.S.C. §1133(4)).

The Wild and Scenic Rivers Act is similar in that certain rivers and their immediate environments are preserved in free-flowing condition. The Act prohibits the Federal Power Commission from licensing construction of any utility facility on or directly affecting any area of a river designated as a component of the wild and scenic rivers system (16 U.S.C. §1278).

Those sites within the study area which are affected by the Wilderness Act and the Wild and Scenic Rivers Act are discussed in Volume 4, Section 6.3.1.1.

2.1.2. Army Corps of Engineers (Corps)

The Rivers and Harbors Act of 1899 (33 U.S.C. § 401 et seq.) is administered on a permit basis by the U.S. Army Corps of Engineers. The Act prohibits discharge of "any refuse matter of any kind or description whatever" into any navigable waterway or its tributaries (33 U.S.C. § 407). The Act also prohibits depositing material on the banks in such a way that the material is liable to be washed into the waterway and impede or obstruct navigation (33 U.S.C. § 407). The Act does not apply to liquid wastes from streets and sewers, and dumping into navigable waterways or their tributaries is allowed upon issuance of a permit by the Corps. Violations of the Act are punishable by fines and imprisonment (33 U.S.C. §411).

2.1.3. U.S. Forest Service (USFS)

U.S. Forest Service authority over national forest lands was established by the Organic Administration Act of 1897 (16 U.S.C. §471 et seq.). Under the Multiple Use Act of 1960, the Secretary of Agriculture was authorized to develop and administer the renewable surface resources of national forests "so that they are utilized in the combination that will best meet the needs of the American people" (16 U.S.C. § 531). The

siting of utility facilities and transmission lines crossing national forest land are considered to be among the multiple uses thus provided for.

The Forest Service Manual (FSM) outlines the basic administrative regulations and policies which govern transmission line siting on national forest land. Application for an easement or special use permit (FSM 251.65) must be made for any proposed line of 33 KV capacity or higher, and its approval is contingent upon the easement being consistent with other planned uses of the land and not creating "any foreseeable serious adverse consequences concerning long-term management of the Federal lands" (FSM 2703(1), R-1, supp. 43). If a multiple use plan does not exist, an environmental analysis and report on the proposed line must show that it would be compatible with quality land management. Policy also directs the USFS to encourage public involvement in areas to be affected by a proposed line.

Final approval of the easement application also depends upon a satisfactory examination of the relationship of the proposed transmission line to the power marketing program of the United States (FSM 1023.4-251.52b). The project must "be fully coordinated with the power needs of other private and/or Federal power agencies within the region" and "directed toward either reducing the number of rights-of-way or consolidating compatible uses within a right-of-way" (FSM 2728.12, R-1 Supp. 44).

A further aspect of the USFS policy concerns certain roadless and undeveloped areas and "new study areas" which may be nominated for inclusion in the National Wilderness Preservation System under the Wilderness Act of 1964. Such areas are managed to protect their wilderness characteristics until detailed studies can be concluded and recommendations accepted concerning their classification. Therefore, activities such as road building and construction of permanent improvements are prohibited in the interim (FSM 8261.1).

2.1.4. Bureau of Land Management (BLM)

The Bureau of Land Management has administrative authority over uses of most federal (public) land, except that which is specifically set aside under the jurisdiction of another agency (i.e., Indian lands, national forest lands, etc.). The Secretary of the Interior is authorized and empowered, under general regulations adopted by him, to permit the use of rights-of-way through public lands (with the approval of the chief officer of the given land unit) for electric plants, poles and lines (43 U.S.C. §959). Rights-of-way or easements are granted upon a finding that the facilities are compatible with the public interest.

2.1.5. Bureau of Indian Affairs (BIA)

The Secretary of the Interior is "empowered to grant rights-of-way for all purposes...over and across any lands now or hereafter held in trust by the United States for individual Indians or Indian tribes, communities, bands or nations..." (25 U.S.C.§323). However, rights-of-way for transmission lines must not conflict with the power development program of the United States (25 C.F.R. §161.27).

In addition, the consent of proper tribal officials is required for the "...grant of a right-of-way or permission to survey over and across any lands belonging to a tribe organized under the Act of June 18, 1934" (48 Stat. 986, otherwise known as the Indian Reorganization Act, 25 U.S.C. §324). All tribes in Montana except those on the Fort Peck and Crow Reservations have adopted this Act.

The Secretary of the Interior may grant a right-of-way across lands held by individual Indian owners without their consent, but only if ownership is uncertain, the owners cannot be found, or several owners cannot reach an agreement (25 U.S.C. § 324).

2.1.6. Bureau of Reclamation (BR)

The Bureau of Reclamation, power marketing agency of the federal government, is responsible for reviewing applications for rights-of-way to determine that the planned construction does not conflict with the federal power marketing and transmission program. The BR has no specific legal authority over the siting, construction and operation of the proposed power plant facilities, nor does it have direct responsibility for activities related to transmission line siting. However, BR does serve in an advisory capacity to the BLM and the USFS concerning the power marketing aspects of lines which cross lands they administer. This advisory role helps ensure compliance with regulations requiring that proposed transmission facilities which would cross federal lands be compatible with the power marketing program of the United States (FSM 1023.4-251.52b and 43 CFR § 2851.1).

2.1.7. Bonneville Power Administration (BPA)

The Bonneville Power Administration was created by the Bonneville Project Act (16 U.S.C. § 832 *et seq.*) to dispose of the electric energy generated by the Bonneville project dams on the Columbia River. In order to carry out this directive BPA is authorized to construct and operate facilities for transmitting electric energy and "to interconnect the Bonneville project with other Federal projects and publicly owned power systems" for the purpose of interchange of electric energy (16 U.S.C. § 832a). The Administrator of BPA is further authorized to "enter into contracts with public or private power systems for the mutual exchange of unused excess power upon suitable exchange terms for the purpose of economical operation or providing emergency or break-down relief" (16 U.S.C. § 832d).

An additional act was passed August 31, 1964, "...to guarantee electric consumers in the Pacific Northwest (defined as Oregon, Washington, Montana west of the Continental Divide, and portions of Nevada, Utah, and Wyoming within the Columbia River drainage basin) first call on electric plants in the region and to guarantee electric consumers in other regions reciprocal priority" (76 Stat. 756). Thus, the sale, delivery and exchange of electric energy to regions outside the Pacific Northwest is limited to surplus energy and surplus peaking capacity.

The proposed 500 KV lines would interconnect

with the BPA transmission system at Hot Springs, Montana. Further discussion of the Northwest grid system is presented in Volume 4, Section 4.3.2.

2.2. State

2.2.1. General Laws

Certain state laws do not regulate or authorize any particular agency's activities but, rather, establish policies which all state agencies must carry out in their respective areas of responsibility.

2.2.1.1. Montana Constitution

Article IX of the Montana Constitution of 1973 provides:

> Section 1 (3). The legislature shall provide adequate remedies for the protection of the environmental life support system from degradation and provide adequate remedies to prevent unreasonable depletion and degradation of natural resources.
>
> ****
>
> Section 4. The legislature shall provide for the identification, acquisition, restoration, enhancement, preservation, and administration of scenic, historic, archeologic, scientific, cultural, and recreational areas, sites, records and objects, and for their use and enjoyment by the people.

Such concerns represent state policy which must be taken into consideration by state agencies in arriving at decisions.

2.2.1.2. Montana Environmental Policy Act (MEPA)

The Montana Environmental Policy Act of 1971 (Section 69-6501, *et seq.*, R.C.M. 1947) declares that "recognizing the profound impact of man's activity on the interrelations of all components of the natural environment, it is the continuing policy of the state of Montana to use all practicable means and measures...to create and maintain conditions under which man and nature can coexist in productive harmony..." (Section 69-6503, R.C.M. 1947). All state agencies are directed to:

> (1) fulfill the responsibilities of each generation as trustee of the environment for succeeding generations;
>
> ****
>
> (4) preserve important historic, cultural, and natural aspects of our unique heritage, and maintain, wherever possible, an environment which supports diversity, and variety of individual choice;
>
> ****
>
> (6) enhance the quality of renewable resources...(Section 69-6503, R.C.M. (1947).

Reports are required on proposals which would significantly affect environmental quality and

must include detailed statements on:

i. the environmental impact of the proposed action,
ii. any adverse environmental effects which cannot be avoided should the proposal be implemented,
iii. alternatives to the proposed action,
iv. the relationship between local short-term uses of man's environment and the maintenance of long-term productivity, and
v. any irreversible and irretrievable commitments of resources which would be involved in the proposed action, should it be implemented. (Section 69-6504, R.C.M. 1947).

MEPA also created the Environmental Quality Council, a 13-member body charged with monitoring all proposals, reports and activities in the state which may affect the quality of the environment and authorized to hold hearings, issue subpoenas and compel the attendance of witnesses in order to examine such proposals. The Council also carries out extensive information gathering and dissemination activities and can make subsequent recommendations to the legislature and the Governor for establishment of future environmental policy.

2.2.1.3. Montana Administrative Procedure Act (APA)

The primary purpose of the Montana Administrative Procedure Act of 1971 (Section 82-4201 et seq., R.C.M. 1947) is to prescribe uniform procedures for rule making, licensing, rate making and other activities of the various state agencies. The APA seeks to ensure procedural due process and fairness in these activities by providing for the input and participation of those interested and affected.

Pursuant to the requirements of Section 82-4203 of the APA, the Department will make available to the public all written rules and policy statements which indicate the basis of authority and the procedures under which this statement was compiled. Further information concerning the criteria which will govern a final decision on this proposal is also available.

2.2.2. Department of Natural Resources and Conservation

2.2.2.1. Energy Planning Division

The Energy Planning Division was created to administer the Utility Siting Act of 1973 (Section 70-801 et seq., R.C.M. 1947). The state legislature, recognizing the effect which uncontrolled construction of energy conversion facilities could have on citizens and environment of Montana, declared that "no power or energy conversion facility shall hereafter be constructed or operated within this state without a certificate of environmental compatibility and public need" (Section 70-802, R.C.M. 1947).

Authority to approve, deny, or modify an application is vested in the Board of Natural Resources and Conservation. The Board may not grant a certificate, either as proposed or as

modified, unless it finds and determines such matters as:

(a) the basis of the need for the facility;
(b) the nature of the probable environmental impact;
(c) that the facility represents the minimum adverse environmental impacts...

****

(g) that the facility will serve the public interest, convenience, and necessity; and
(h) that duly authorized state air and water quality agencies have certified that the proposed facility will not violate state and federally established standards... (Section 70-810, R.C.M. 1947)

Additional criteria which must be included in the decision-making process are mentioned in the Siting Act (Sections 70-810 and 70-816, R.C.M. 1947) and outlined in Volume 2, Chapter 3, of this Draft Environmental Impact Statement.

The Siting Act provides 600 days (for all but applications for small transmission lines) for the Department to conduct a study and present a comprehensive report to the Board which includes all data, evaluations of impacts and recommendations concerning a proposed project. Upon receipt of the Department's report, the Board must set a hearing date within 60 days (Section 70-807, R.C.M. 1947). Any interested persons as well as the applicant, the Department, and other involved agencies may present testimony or evidence at the hearing which must be conducted in accordance with the contested case procedure of the Montana Administrative Procedure Act. Within a reasonable time after the hearing, "the Board shall make complete findings, issue an opinion, and render a decision" (Section 80-710, R.C.M. 1947).

2.2.2.2. Water Resources Division

Under the Montana Water Use Act of 1973 (Section 89-865 et seq., R.C.M. 1947), no one may "appropriate water or commence construction of diversion, impoundment, withdrawal or distribution works therefore except by applying for and receiving a permit from the Department" (Section 89-880(2), R.C.M. 1947). There are few restrictions on who may appropriate water as long as a beneficial use (defined as "use of water for the benefit of the appropriator, other persons, or the public") is served. Beneficial uses mentioned in the law include, but are not limited to, industry, agriculture, wildlife, recreation and mining (Section 89-867, R.C.M. 1947).

The primary consideration in the administration of water rights in Montana is the principle that "first in time is first in right" (Section 89-891(1), R.C.M. 1947). Thus, existing water rights must be protected before new appropriations are granted. The Department must issue a permit if:

(1) there are unappropriated waters in the source of supply;
(2) the rights of a prior appropriator will not be adversely affected;
(3) the proposed means of diversion or

construction are adequate;

(4) the proposed use of water is a beneficial use; and

(5) the proposed use will not interfere unreasonably with other planned uses or developments for which a permit has been issued or for which water has been reserved (Section 89-885, R.C.M. 1947).

The act provides a comprehensive procedure (Sections 89-870 through 89-879, R.C.M. 1947) for the determination and adjudication of all "existing rights" (those protected by law prior to July 1, 1973). After the procedure is completed for a given area or source, certificates of water rights are issued to those holding existing rights and to those who complete appropriations under permits issued by the Department. It should be noted that the district courts continue to have the authority "to supervise the distribution of water among all appropriators" (Section 89-896(1), R.C.M. 1947).

In 1974, noting the"...widespread interest in making substantial appropriations of water in the Yellowstone River Basin" which "threaten the depletion of Montana's water resources to the significant detriment of existing and projected agricultural, municipal, recreational and other uses, and of wildlife and aquatic habitat," the state legislature imposed a three-year moratorium on the Department's action on applications for permits to appropriate large quantities of water (i.e., for reservoirs storing 14,000 or more acre feet or for a flow rate greater than 20 cubic feet per second) from the Yellowstone Basin (Sections 89-8-103 through 89-8-811, R.C.M. 1947). However, applications may continue to be filed in the interim, and applications to appropriate water for utilities which have received a certificate of environmental compatibility and public need under the Utility Siting Act are exempted (Section 89-8-104, R.C.M. 1947).

Under the Floodway Management and Regulation Act of 1971 (Section 89-3501 et seq., R.C.M. 1947), the Department is authorized to gather information upon which to base the delineation of the 100-year floodplain (that area which is inundated by a flood of 100-year frequency) and the floodway (that portion of the floodplain required to convey moving floodwaters) for most waterways in Montana. Within six months after establishment of these boundaries by the Board of Natural Resources and Conservation, local authorities must adopt land use regulations at least as stringent as the statewide minimum standards. New uses in the floodway which would restrict the movement of floodwaters are thereafter prohibited, and new uses which would require structures, fill or storage equipment or materials are allowable only following issuance of a permit. Consequently, at water crossings, the placement of transmission line poles within a designated floodplain is subject to regulation.

2.2.2.3. Forestry Division

The Forestry Division administers several laws that would affect construction of the proposed transmission lines. Anyone about to engage in forest cutting on private land (which would be required for right-of-way clearing) must enter into a fire hazard reduction agreement or post a bond at an amount prescribed by the Department (Sections 28-404, 28-408 through 28-412, R.C.M.

1947). Slash and forest debris from any right-of-way clearing operation must be disposed of as quickly as logging progresses, and violators are guilty of a misdemeanor and subject to a fine (Section 28-405, R.C.M. 1947). Valid permits, the form and substance of which are determined by the Department, are required for open burning, including slash burning and land-clearing fires, on any forest lands in Montana (Sections 28-114 and 28-116, R.C.M. 1947).

2.2.3. Department of Health and Environmental Sciences

2.2.3.1. Air Quality Bureau

Any facility capable of causing or contributing to air pollution is subject to the provisions of the Clean Air Act of Montana (Section 69-3906 et seq., R.C.M. 1947), administered by the Montana Department of Health and Environmental Sciences (HES) through the Air Quality Bureau. The Act defines air pollution as:

> The presence in the outdoor atmosphere of one or more air contaminants in such quantities and duration as is or tends to be injurious to human health or welfare, animal or plant life, or property, or would unreasonably interfere with the enjoyment of life or property or conduct of business (Section 69-3906, R.C.M. 1947).

All power units at Colstrip will be subject to state emission regulations (for particulates and sulfur) and federal regulations (for particulates, sulfur dioxide, and nitrogen oxides), all of which the Montana Air Quality Bureau is obligated and authorized to enforce.

Montana also has a visible emission standard which requires that any discharge from a stack or chimney shall not exceed a density or opacity darker than the equivalent of a No. 1 on the Ringlemann Chart. The federal emission regulation requires the same control for particulates. Visible emission standards do not apply to emissions of uncombined water.

Current state and federal emission standards, and the formulas by which maximum allowable emissions are determined, are presented in Volume 3b, Appendix A3.

Installation, alteration, or use of any equipment emitting pollutants may be prohibited by the Board of Health and Environmental Sciences unless a permit has been obtained. The Board is responsible for issuing, suspending, revoking, and renewing such permits, for monitoring emission levels in the state, and for requiring access to records pertaining to emissions (Sections 69-3909 and 69-3910, R.C.M. 1947). Anyone guilty of violating a permit condition or any provision of the Act is subject to a fine (Section 69-3921, R.C.M. 1947).

2.2.3.2. Water Quality Bureau

Under the provisions of the Water Pollution Control Act (Section 69-4801 et seq., R.C.M. 1947), the Water Quality Bureau of HES has the responsibility and authority for "protecting, maintaining, and improving the quality and pota-

bility of water for public water supplies, wildlife, fish and aquatic life, agriculture, industry, recreation and beneficial uses" (Sections 69-4801(1) and 69-4805, R.C.M. 1947). The Act makes unlawful the pollution of any state waters, either surface or underground, including, in some cases, irrigation and drainage systems. Pollution is defined as:

> Contamination, or other alteration of the physical, chemical, or biological properties of any state water, which exceeds that permitted by Montana water quality standards...(Section 69-4802(5), R.C.M. 1947).

A permit from the Water Quality Bureau may be required for any surface waste-water discharge from any power units at Colstrip or from the town itself. If construction of either power plants or transmission lines would affect or threaten to affect the quality of any surface water, the Bureau would be obligated to act. It is doubtful that the Bureau has any authority over the taking of water from the Yellowstone River for industrial purposes, unless the withdrawal were so large as to affect the quality of the remaining flow.

Current Montana water quality standards are given in Volume 3b, Appendix B1. No state groundwater quality standards have yet been established.

The Bureau is responsible for detecting and preventing perpetration or continuation of any violation of the provisions of the Act, including violation of any rule, permit, standard, or order issued thereunder. To that end the Bureau may issue orders and seek injunctions and civil penalties through the district courts. Willful violations of the Act are punishable by fines and imprisonment (Sections 69-4809.1(f), 69-4825, and 69-4823, R.C.M. 1947).

2.2.3.3. Solid Waste Management Bureau

The Solid Waste Management Bureau of HES derives its authority from statutes establishing procedures for regulating refuse disposal areas to protect the public health and safety (Section 69-4001 *et seq.*, R.C.M. 1947). Refuse is defined as:

> ...all putrescible and nonputrescible solid wastes (except body wastes), including garbage, rubbish, street cleanings, dead animals, yard clippings, and solid market and solid industrial wastes. (Section 69-4002, R.C.M. 1947).

Anyone intending to operate a refuse disposal area must first obtain a license from the appropriate local, county, or district board of health, but local boards may not grant license applications until the Solid Waste Management Bureau has approved the proposed site and the applicant's plans (Sections 69-4004 and 69-4005, R.C.M. 1947). It is also the responsibility of the Bureau to establish rules and regulations for the operation of refuse disposal areas, inspect established areas, and make recommendations to the local boards of health concerning enforcement of refuse disposal statutes (Section 69-4007, R.C.M. 1947).

Any areas established to dispose of indus-

trial wastes from any unit at Colstrip or of refuse from the town must ultimately be approved by the Solid Waste Management Bureau.

A violation of the law constitutes a misdemeanor, and any violator, upon conviction, is subject to a fine (Section 69-4009, R.C.M. 1947).

2.2.3.4. Occupational Health Bureau

The Occupational Health Act of Montana is administered by HES through its Occupational Health Bureau (Section 69-4201 et seq., R.C.M. 1947). A permit must be secured from the Board of Health and Environmental Sciences before "the installation, alteration, or use of any machine, equipment, device or other article which it finds may cause to contribute to occupational disease or which is intended primarily to prevent or control occupational disease" (Section 69-4212-(1), R.C.M. 1947). The Department has the right to inspect any appropriate property to determine compliance with the Act, although it may grant applicants exemptions and partial exemptions from the provisions (Sections 69-4213 and 69-4217, R.C.M. 1947). Violations are punishable by fines and imprisonment (Section 69-4221, R.C.M. 1947).

Under the Montana Radiation Control Act, the Occupational Health Bureau is given the authority to license and register all persons involved in the use or handling of radioactive materials, inspect any building within its jurisdiction, and adopt rules relating to the control of sources of ionizing radiation (Section 69-5801 et seq., R.C.M. 1947). Persons violating any provision of the Act are guilty of a misdemeanor and subject to penalties, including fines and imprisonment (Section 69-5816, R.C.M. 1947).

All power units at Colstrip will be subject to the regulations of the Occupational Health Bureau for the purpose of protecting human health and safety in the work place. The Bureau might also be involved with the construction of the Colstrip to Hot Springs transmission lines, if approved. The Bureau has performed extensive radiation monitoring of the power plant impact area (See Volume 3a, Section 10.1.8) and will continue to do so.

2.2.4. Department of State Lands

2.2.4.1. Easements Across State-Owned Lands

The Board of Land Commissioners, through the Department of State Lands, administers statutes governing easements across state lands. Persons desiring an easement for any public purpose, including construction of transmission lines, must apply to the Department. Upon study and recommendation of the Department, the Board considers the application, and, if it is to be approved, fixes the amount of damages or compensation to be paid to the state. If the easement is part of a major project, or is likely to be controversial, an environmental impact statement is usually written before the Board makes its decision.

If the easement would pass over state lands which are under a sales contract, the purchaser must be made a party to the proceedings and

consent in writing to the proposed construction and amount of compensation before the easement is approved. If the proposed easement crosses state lands which are under lease, consent of the lessee need not be obtained, but the person receiving the easement grant must give notice to the lessee and make just settlement for any damages. The lessee is responsible for cooperating in the opening of the right-of-way, including the removal of obstructing fences (Section 81-803(1) et seq., R.C.M. 1947).

2.2.4.2. Leases of State-Owned Lands and Minerals

The Department of State Lands and the Board of Land Commissioners are also responsible, under Title 81, R.C.M. 1947, for surface, coal-mining, oil and gas exploration and production, sand and gravel utilization, general mining, and geothermal leases on state lands. If a coal mining lease is issued for lands already under surface lease, care must be taken to protect the rights of the original lessee (Section 81-501(1), R.C.M. 1947). If the coal is not mined, handled, and marketed subject to certain conditions, such as preventing as far as possible any wastage, the lease may be forfeited (Section 81-501(2), R.C.M. 1947). The Board is authorized to make additional rules and regulations as necessary (section 81-507, R.C.M. 1947).

Western Energy Company now holds a coal lease on one state section to be included in the mine that would fuel the proposed power plants; the surface lease to that section is held by a private landowner. However, holding the coal lease does not guarantee the lessee the right to mine that coal if the mine would not be approved under reclamation laws or any other applicable statutes.

2.2.4.3. Reclamation Division

The Montana Strip Mining and Reclamation Act (Section 50-1034 et seq., R.C.M. 1947) makes it unlawful to strip mine without a permit issued by the Department of State Lands. Permits cannot be issued for land of a special, exceptional, critical, or unique character, considering such values as biological productivity, ecological fragility and importance, and scenic, historic, archaeologic, or scientific significance. In addition, if an area cannot be reclaimed to specified criteria, it cannot be mined under this Act. Violators of any provision are subject to a civil penalty and may be guilty of a misdemeanor (Section 50-1056, R.C.M. 1947).

The Strip Mined Coal Conservation Act (Section 50-1401, et seq., R.C.M. 1947) makes it unlawful to strip mine any land in Montana without first receiving approval from the Department of State Lands. The purpose of the Act is to reduce waste resulting from strip mining operations, and an operator may be compelled to mine a seam of coal if it can be proven strippable and marketable in the usual course of trade. Besides preventing coal waste, such action prevents redisturbance of the site if changing values later increase the marketability of the seam not originally mined. All strip mining plans at Colstrip are under the jurisdiction of the Department.

The Strip Mine Siting Act (Section 50-1601 et seq., R.C.M. 1947) authorizes the Department of State Lands to review and approve or disapprove new strip mine sites and reclamation plans. A permit from the Department is necessary for work preparatory to a mining operation, and grounds for permit refusal are specified. The Act also provides penalties for violations of the Act or of any order adopted thereunder (Section 50-1611, R.C.M. 1947).

The Open Cut Mining Act (Section 50-1501 et seq., R.C.M. 1947) regulates the mining of bentonite, scoria, sand, and gravel when the overburden must be removed. A permit must be granted by the Department of State Lands before such materials could be mined for construction or operation of any power plants or transmission lines, or for development of the town of Colstrip. In addition, each operator must enter into a contract with the State Board of Land Commissioners which provides for reclamation of the land. Violation of a contract or of any provision of the Act is a misdemeanor and subject to a fine (Section 50-1513, R.C.M. 1947).

The new Hard Rock Act (Section 50-1201 et seq., R.C.M. 1947) is interpreted by the Board of Land Commissioners and the Department of State Lands to apply to placer or dredge mining, rock quarrying, and peat mining operations and is understood to include mining of topsoil (M.A.C. Rule 26-2.10(2)-S10000). The Department will not allow topsoil salvaged from any strip mining operation to be utilized for anything other than reclamation of the mine site. Therefore, if topsoil is needed for any large area, whether in connection with industrial activity or with development of the town of Colstrip, a permit must be obtained under this Act.

2.2.5. Department of Fish and Game

The State Fish and Game Commission is responsible for protection, preservation and perpetuation of Montana's fish and wildlife resources and for enforcing all relevant laws concerning fish, game, fur-bearing animals and game and nongame birds (Section 26-101.1 et seq., R.C.M. 1947). In addition, the Department of Fish and Game has been authorized by the Nongame and Endangered Species Conservation Act "...to manage certain nongame wildlife for human enjoyment, for scientific purposes, and to ensure their perpetuation as members of ecosystems" (Section 26-1801(1) et seq., R.C.M. 1947).

Several laws administered by other state agencies involve this Department in coal and energy related action. Under the Montana Utility Siting Act, the Department reports to the Department of Natural Resources and Conservation concerning the impact of any proposed facility on such matters as wildlife and recreation sites. Under the Montana Strip Mining and Reclamation Act, the Department advises the Department of State Lands concerning reasons for denial of strip mine permits. Under the Montana Water Use Act, the Department may reserve flows of Montana rivers and streams in order to maintain minimum flows, levels, or qualities of water.

2.2.6. Department of Highways

The Department of Highways is involved with electric transmission lines only where they conflict with highway locations and construction, and must then make payment for their relocation (Sections 32-2414 and 32-2416, R.C.M. 1947). In most instances this requires only the relocation of a few poles and the provision of crossings of the road or highway which ensure safety to the public (Alley 1974).

2.2.7. Public Service Commission

The Public Service Commission regulates certain monopolies operating in this state, which expressly include public utilities (Section 70-103, R.C.M. 1947). The Commission must see that reasonably adequate electrical energy is furnished and that a reasonable charge is made.

The Commission also has the power to compel railroads to provide, maintain and operate sufficient train service within the state (Section 72-123, R.C.M. 1947). Therefore, if considerable quantities of coal are transported across the state, the Commission would have responsibility for ensuring that adequate railroad service is available.

2.3. Local Laws

The Utility Siting Act provides that a certificate to construct a utility facility may not be granted unless "the location of the facility as proposed conforms to applicable state and local laws and regulations" (Section 70-810(f), R.C.M. 1947). However, the Act further states that the Board of Natural Resources and Conservation may "refuse to apply any local law or regulation if it finds that ... such law or regulation is unreasonably restrictive in view of the existing technology, or of factors of cost or economics, or of the needs of consumers whether located inside or outside of the directly affected government subdivisions (Section 70-810(f), R.C.M. 1947).

2.3.1. City

Siting of facilities within the jurisdictional boundaries of cities would be subject to local zoning ordinances, noting, however, the limitations of section 70-810(f), R.C.M. 1947, quoted above.

2.3.2. County

Most counties have indicated either that applicable regulations do not exist or that detailed information regarding proposed utility sites and corridors would be needed before a determination of applicable laws could be made.

Rosebud County has adopted an interim zoning resolution which will be effective for at least one year (with an option for a one-year renewal) or until a master zoning plan can be researched and adopted. The resolution adopts the Ken R. White Company's Plan for Colstrip and places re-

strictions on land use in other specific sections of land near Colstrip. However, nothing in the resolution "shall be construed to prevent or affect the construction, maintenance, repair or removal of public utility and transportation facilities in the area affected."

Boards of County Commissioners may establish forest fire seasons, during which no person may set any open fire (such as might be required with right-of-way clearing) on forest, range, or crop land within that county without a written permit from the proper rural fire chief (Section 28-603, R.C.M. 1947). Violation of these provisions is a misdemeanor.

2.3.3. Conservation Districts

Conservation districts are political subdivisions of the state which are empowered to develop comprehensive district plans. Land use regulations relevant to soil and water conservation may be adopted upon their approval by all qualified voters within the district and their enactment by district supervisors.

CHAPTER THREE Methodology

The evaluation of the Colstrip Units 3 and 4 generation and transmission application uses a planning process for decision-making. The elements of study are shown in the accompanying diagram entitled "Colstrip Units 3 and 4 Study-Flow Diagram." The systematic execution of this process helps provide documentation that all requirements in the Utility Siting Act have been satisfied prior to submission of the departmental recommendations to the Board of Natural Resources and Conservation. The methodology also provides a measure of organizing and simultaneously directing a complex series of separate but interrelated social, economic, environmental and engineering studies. Although specific inventory and analysis methods have been employed in each component of the study, the purpose of this section is to describe the general steps taken throughout the course of the entire study.

Opportunities for public participation are available at each step in the process. Public involvement has been formalized with meetings and hearings at later stages, such as during the review period of the draft environmental impact statement.

The Departmental recommendations, to be included in the final environmental impact statement, will be largely based on an analysis of all the elements contained in the Utility Siting Act. Because of this the major steps in the study have progressed concurrently rather than sequentially. For example, the inventory of natural and social values was conducted even though the basic question of need was unanswered.

For purposes of illustration the following narrative will follow the study-flow diagram recognizing that the various steps have occurred concurrently.

The first step in the process is an evaluation of need for the facility (for detailed disscussion, see Volume 2, Chapter 4). There are technical, social and legal sides to the determination of need. Technical considerations include an analysis of load growth in Montana, the Pacific Northwest and the service district of the applicant utilities. This allows for a prediction of future energy consumption. The social aspects of need relate to energy conservation efforts and the effects of utility promotional activities on load growth. Also included is differentiation between need and demand and a consideration of changing lifestyles. The legal basis of need is derived, in part, from an interpretation of need under the Utility Siting Act. A request for this interpretation has been made to the Attorney General and may be available in the final environmental impact statement.

The second step in the process is to compare the applicants' proposed electricity sources (i.e. coal-fired power plant) with alternative sources of electricity (Volume 2, Chapter 5). Potential sources such as solar, wind, and geothermal are reviewed. However, the most detailed comparison is made between the sources that are presently developable: hydro, nuclear and coal-fired. The comparison is based on the availability of plant sites and resources for each energy source, existing technology, time constraints of licensing and construction, and impact on the social, economic and natural environment.

Another issue concerns the distribution of future electric growth to the major power sources of hydro, nuclear and fossil fuel. This is a complex national and regional question which cannot be resolved at the state level.

If coal-fired power is determined to be the most acceptable source of electricity for this project, the next step is to analyze mine-mouth generation versus the load center approach. This comparison is largely based on cost-benefit analysis of shipping the coal to the load center versus transmitting electricity. Economic analysis is applied here in the broadest sense to include long-run costs as well as social and environmental effects. (Volume 2, Chapter 6).

Further exploration of the mine-mouth approach leads to an evaluation of alternative plant sites. Again, the alternatives are appraised by means of a cost-benefit analysis of impact on the human and natural environment.

This study will eventually point toward a preferred plant site (i.e. Colstrip site). The evaluation of impact on the preferred site and location-related measures to minimize the impact is in process. Three major components constitute this investigation: mining activity, the power plants, and the transmission lines.

The mining activity study considers alternative mining technologies and a definition of the impact area (Volume 3, Chapter 9). Natural and cultural values are inventoried as a basis for determining impact. Possible effects of plant emissions on vegetation and hence on the feasibility of reclamation, are also studied (Volume 3, Chapter 11).

The power plant study began with an analysis of the applicants' plant design objectives or criteria as well as the construction and operational characteristics of the proposed facilities (Volume 3, Chapter 8). A thorough understanding of these criteria and characteristics enables one to more accurately define the impact boundary and its magnitude, and to determine the type and extensiveness of environmental elements that should be inventoried (Volume 3, Chapter 10). As a result, a common study area was selected to include all data sampled for impact analysis surrounding the applicants' preferred site.

POWER PLANT STUDY MATRIX

PLANT CHARACTERISTICS	ENVIRONMENTAL ELEMENTS	NATURAL ELEMENTS										CULTURAL ELEMENTS												
				HYDROLOGY		VEGETATION		WILDLIFE		METEOROLOGY		LOCAL AREA												DISTANT AREA (POPULATION & COMMUNITY BENEFITTERS)
												HEALTH			LAND USE PATTERN			COMMUNITY STRUCTURE		COMMUNITY SERVICE				
		GEOLOGY	SOIL	GROUND WATER	SURFACE WATER	TERRESTRIAL	AQUATIC	TERRESTRIAL	AQUATIC	AIR	MICROCLIMATE	HUMAN (PHYSICAL)	CROP	LIVESTOCK	EXISTING	PROJECTED	POPULATION (SIZE)	SOCIAL	ECONOMIC	PUBLIC	SEMI-PUBLIC	PRIVATE		
CONSTRUCTION	CONSTRUCTION DUST																							
CONSTRUCTION	CONSTRUCTION NOISE																							
CONSTRUCTION	LABOR FORCE																							
PHYSICAL CHARACTERISTICS	FOUNDATION REQUIREMENT: POWER PLANT																							
PHYSICAL CHARACTERISTICS	FOUNDATION REQUIREMENT: ASH POND																							
PHYSICAL CHARACTERISTICS	FOUNDATION REQUIREMENT: WATER STORAGE POND																							
PHYSICAL CHARACTERISTICS	PHYSICAL FORM - POWER PLANT COMPLEX																							
COAL ACTIVITIES	STRIP MINING																							
COAL ACTIVITIES	RECLAMATION																							
COAL ACTIVITIES	COAL TRANSPORTATION																							
COAL ACTIVITIES	COAL STORAGE																							
COAL ACTIVITIES	LABOR FORCE																							
COAL ACTIVITIES	TAX																							
OPERATION	MATERIAL FLOW IN (BOTH QUALITY & QUANTITY): COAL																							
OPERATION	MATERIAL FLOW IN (BOTH QUALITY & QUANTITY): AIR																							
OPERATION	MATERIAL FLOW IN (BOTH QUALITY & QUANTITY): WATER																							
OPERATION	MATERIAL FLOW IN (BOTH QUALITY & QUANTITY): CHEMICAL MATERIALS																							
OPERATION	MATERIAL FLOW OUT (BOTH QUALITY & QUANTITY): EXHAUSTED GAS: SO_2																							
OPERATION	MATERIAL FLOW OUT (BOTH QUALITY & QUANTITY): EXHAUSTED GAS: NO_X																							
OPERATION	MATERIAL FLOW OUT (BOTH QUALITY & QUANTITY): EXHAUSTED GAS: PARTICULATES																							
OPERATION	MATERIAL FLOW OUT (BOTH QUALITY & QUANTITY): EXHAUSTED GAS: TRACE ELEMENTS																							
OPERATION	MATERIAL FLOW OUT (BOTH QUALITY & QUANTITY): EXHAUSTED GAS: ETC																							
OPERATION	MATERIAL FLOW OUT (BOTH QUALITY & QUANTITY): LIQUID WASTES																							
OPERATION	MATERIAL FLOW OUT (BOTH QUALITY & QUANTITY): SOLID WASTES																							
OPERATION	MATERIAL FLOW OUT (BOTH QUALITY & QUANTITY): RADIATION																							
OPERATION	MATERIAL FLOW OUT (BOTH QUALITY & QUANTITY): NOISE																							
OPERATION	MATERIAL FLOW OUT (BOTH QUALITY & QUANTITY): ELECTRICITY																							
OPERATION	LABOR FORCE																							
OPERATION	TAX																							

Constructional and operational characteristics of the power plant vary with the technological method used. One method may fulill the required engineering performance, but may not be acceptable from the standpoint of environmental impact or vice versa. Therefore, the study of alternative technologies such as cooling and air emission control systems (Volume 2, Chapter 7) is based on premises which are acceptable from various standpoints. A check-back "loop" is used to ensure that these premises have been adequately examined. Also, various check-back "loops" have been used throughout the entire methodology for similiar purposes.

A matrix is constructed with a list of the natural and cultural elements on the horizontal (x) axis and construction, operation, maintenance and mining characteristics of the power plants on the vertical (y) axis (see the accompanying matrix). This matrix is used to identify the effected environmental elements and the degree of impact.

After the power plant characteristics have been analyzed and related environmental elements have been inventoried, the evaluation of the impact shall include a literature search of existing related impact studies and a discussion of impacts which may specifically occur within the study area. A check is made to judge whether or not all potential impacts will meet minimum environmental protection standards (Volume 3, Chapter 11 and 12).

The third major component of this study concerns the transmission system. The methodology of the transmission system study will be discussed in Chapter One of Volume 4.

The fact that all of the steps have been taken in the Colstrip 3 and 4 study which lead toward consideration of the applicants' complete proposal should not be interpreted as an endorsement of that proposal. On the contrary, the basic decision of approval or disapproval has not yet been made.

The "recommendations" indicated in the study-flow diagram will not be made until the final EIS is released in January, 1975. Each of the steps leading toward the applicants' proposal have been taken because that is the basic alternative against which all others must be carefully weighed.

CHAPTER FOUR The Need for the Proposed Facility

The need for Colstrip Units 3 and 4 must be judged in terms of the need for their output. This need can be interpreted in many ways, and there is probably no criterion of need that is universally acceptable. Levels of consumption of electricity that one needs to "keep up with the neighbors" may be quite different from the level one needs to be comfortable, which in turn may be quite different from the national per capita level needed simply for survival of the human species. Because these levels of need form a continuum, it is difficult to select the point on that continuum that separates a "real" need from a "frivolous" need.

If it is difficult to define need in absolute terms, a relative approach may be more fruitful. Need can be evaluated in terms of alternatives. If there are viable alternative sources, the need for Colstrip Units 3 and 4 is certainly diminished. Likewise, if the costs, both dollar costs to the consumer and full costs to society, are prohibitive, the need for Colstrip Units 3 and 4 may prove to be weak.

In this chapter the philosophical question of determining need in an abstract sense is not attempted. Past consumption of electricity and projected future consumption levels are indicated. After these projections are made, a fairly lengthy discussion of the determinants of consumption is put forward together with the probable changes, over time, in those underlying factors. Conservation programs are evaluated in terms of both justification and probable success. Finally, the ability of existing and projected facilities to meet the projected consumption levels is evaluated.

4.1. Historic Electric Consumption

The history of electric energy consumption in the United States has been much publicized: past usage has approximately doubled every 10 years. Both environmentalists and utility companies have expressed concern over this growth rate. The environmentalists are anxious about the side effects implied by projected generation needs; utility officials show considerable concern over any impediment to their ability to provide for these projected demands. Both apparently accept the concept of an inherent 10-year doubling time.

Two general criticisms can be made of the 10-year doubling time projections. The first is that underlying causal factors are not considered. The second problem is that the recent history of energy consumption in the Northwest does not, in fact, support such projections.

Electric energy consumption displays different characteristics crucial for planning purposes. The two most important are the total usage over the observed time period and the peak use during that time period. In the next few sections the total annual use is calculated as an average use figure, which facilitates comparison with peak figures. To avoid double counting, use figures are based on sales to ultimate customers whenever possible, and peak figures represent the

annual peak demand for which the given company or system under consideration is responsible.

4.1.1. Northwest Energy Pool Area

Data furnished by the Northwest Power Pool (see the accompanying Western Systems Coordinating Council Map) indicate an average annual growth rate in the consumption of electricity of 7.3% from the 1963-1964 operating year through the 1972-1973 operating year. This rate approaches the "doubling in 10 years" growth rate.

A closer examination of these figures shows an interesting variation over time. The 7.3% average annual growth is actually made up of an 8.6% average growth rate from 1963-1964 to 1967-1968 and a 5.0% growth rate from 1968-1969 to 1972-1973. Such a change, if in fact it does represent a shift in long term trends, is of major importance. If the 1972-1973 average load (17,311 MW) is extrapolated only 10 years in time, the difference between 7.3% growth and 5% is 6,822 MW of average energy - over four times the output of Colstrip Units 1, 2, 3, and 4 assuming an 80% load factor.

The peak demand on the Northwest Power Pool system increased from 13,442 MW in the 1963-1964 operating year to 26,645 MW in 1972-1973, or at an annual average growth rate of 7.9%. Looking again at the shorter time span of 1968-1969 to 1972-1973, the average annual growth in peak demand is a more modest 4.8%.

Average and peak load data for Puget Sound Power and Light Company (PSP&LC), Portland General Electric Company (PGEC), Pacific Power and Light Company (PP&LC), Washing Water Power Company (WWPC), Montana Power Company (MPC), and the Northwest Power Pool (NWPP) are shown on Tables 4-1 and 4-2. Peak and average loads of NWPP are also displayed graphically in Figure 4-1.

Looking only at electric energy consumption in the four Northwestern states of Montana, Idaho, Washington and Oregon (Table 4-1), a similar, but less pronounced, change in growth rates occurs. Average electric energy consumption grew from 6091 MW in 1961 to 11,883 MW in 1972 (Edison Electric Institue 1971 and 1973b). This represents an average annual growth rate of 6.3%, which can be segmented into an average annual growth rate of 6.9% from 1961 to 1967 and 5.5% from 1967 to 1972.

4.1.2. Applicants' Service Districts

For the five applicant companies, whose service districts are shown on the accompanying Western Systems Coordinating Council Map, a more detailed historical analysis was made. In general, references to average annual growth rates are dropped, and "best" fit curves have been used to summarize the historical trend. Whereas annual average curves depend only on the first and the last year in the data series, the fitted growth rates include the information between its end points. Not only do the fitted growth rates reflect more information, but they are less sensitive to the choice of end points, and thus less responsive to arbitrary manipulation of the

SERVICE AREA of FIVE APPLICANT COMPANIES
Montana Power Company
Washington Water Power Company
Pacific Power & Light
Puget Sound Power & Light
Portland General Electric Company
GENERAL LOAD AREAS
I - Northwest Power Pool
II - Rocky Mountain Power Area
III - New Mexico Power Pool
IV - Pacific Southwest Power Area
0 100 200 300 MILES
SCALE
BRITISH COLUMBIA
FORT ST. JOHN
HUDSON
DAWSON CREEK
ALICE ARM
KITIMAT
PRINCE GEORGE
VANCOUVER
TRAIL
WASHINGTON
BELLEVUE
SEATTLE
SPOKANE
TACOMA
WENATCHEE
OLYMPIA
EPHRATA
LONGVIEW
PORTLAND
SALEM
EUGENE
OREGON
MONTANA
HELENA
BUTTE
I
IDAHO
BOISE
PLENTYWOOD
GRENORA
NORTH DAKOTA
MEDORA
BAKER
LITTLE FOURCHE
SOUTH DAKOTA
RAPID CITY
PINE RIDGE
MARTIN
CHADRON
HYANNIS
MULLER
COLUMBUS
NEBRASKA
LINCOLN
WRAY
IMPERIAL
GENKELMAN
BILLETTE
MIDWEST
WYOMING
II
CHEYENE
IV-D
RENO
CARSON CITY
SAN FRANCISCO
SACRAMENTO
CALIFORNIA
NEVADA
SALT LAKE CITY
UTAH
COLORADO
DENVER
BURLINGTON
COLORADO SPRINGS
MONTROSE
PUEBLO
HOLLY
KANSAS
LAS VEGAS
IV-A&B
IV-C
SPRINGFIELD
TRINIDAD
DE MOINES
LOS ANGELES
GALLUP
SANTA FE
ARIZONA
ALBUQUERQUE
DALIES
OKLAHOMA
SAN DIEGO
PHOENIX
VAUGHN
PUERTO DE LUNA
NEW MEXICO
LINCOLN
III
TUCSON
RINCON
ARTESIA
DEMING
EL PASO
TEXAS
VAN HORN
MARFA

TABLE 4-1

AVERAGE ENERGY SALES TO ULTIMATE CUSTOMERS (MW)

YEAR	PSP&LC	PGEC	PP&LC	WWPC	MPC	NWPP[1]	MONTANA, IDAHO, WASHINGTON AND OREGON
1961							6091
1962							6410
1963	425	590	909	336	318	9196	6778
1964	460	642	978	352	352	10287	7303
1965	493	665	1037	363	379	11188	7840
1966	551	728	1121	383	416	12103	8501
1967	618	768	1144	391	372	12789	9104
1968	705	859	1218	453	400	14248	9736
1969	787	949	1318	452	455	15044	10789
1970	838	1002	1397	466	470	15543	10897
1971	907	1194	1471	497	469	16188	11339
1972	1013	1186	1560	526	493	17311	11883
1973	1052	1225	1635	542	485		

[1]NWPP figures are on a July 1 to June 30 operating year. The figure shown is the average system load figure for July 1 of year shown to June 30 of the following year.

Sources: PSP&LC, PG&EC, PP&LC and WWPC figures furnished by Companies; MPC figures from Form 1., Report to F.P.C.

NWPP figures are courtesy of the Northwest Power Pool Coordinating Group.

Montana, Idaho, Washington and Oregon data are from Historical Statistics of the Electric Utility Industry Through 1970, Edison Electric Institute, and the Statistical Year Book of the Electric Utility Industry for 1972, Edison Electric Institute.

All figures are converted to average use from total annual use.

TABLE 4-2

PEAK SYSTEM DEMAND (MW)

OPERATING YEAR	PSP&LC	PGEC	PP&LC	WWPC	NWPP	YEAR	MPC
1963-4	875	1139	1520	651	13442	1964	649
1964-5	1139	1507	1756	764	16465	1965	
1965-6	1074	1375	1771	679	16431	1966	736
1966-7	1140	1319	1748	700	17097	1967	711
1967-8	1378	1561	1927	750	18960	1968	712
1968-9	1759	1925	2088	917	22065	1969	715
1969-70	1582	1836	2118	858	21792	1970	773
1970-1	1723	1900	2180	881	22675	1971	817
1971-2	1935	2290	2392	1013	24462	1972	852
1972-3	2115	2481	2702	1076	26645	1973	830

Sources: MPC figures are from annual reports of Montana Power Company filed with the Federal Power Commission. All other figures are courtesy of the Northwest Power Pool Coordinating Group.

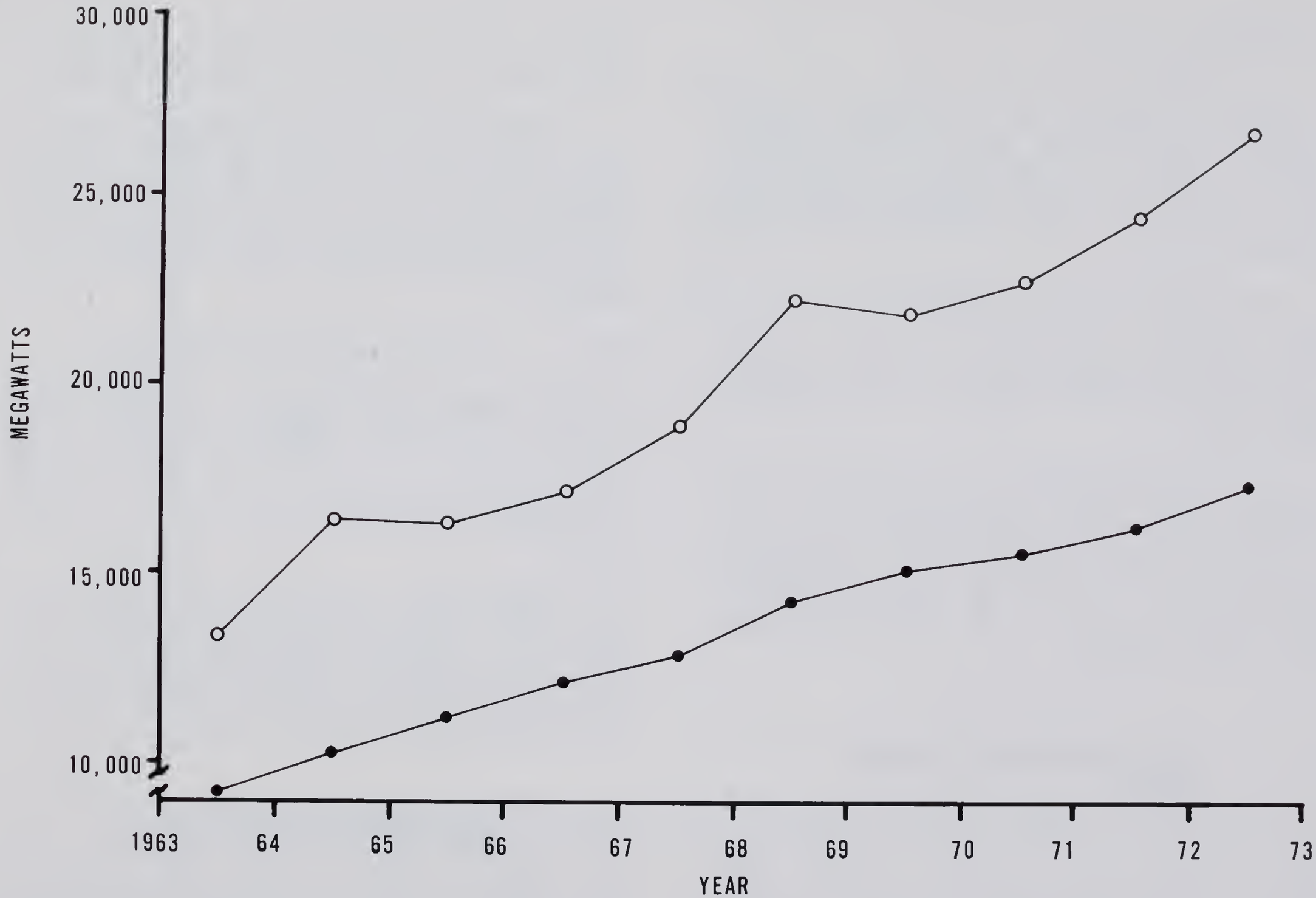

Peak and Average Loads in Megawatts

Northwest Power Pool

FIGURE 4-1

time span considered.

The method of fitting growth rates to the historical data used is by regression analysis, and the condition of best fit that is used minimizes the sum of the squares of the differences between the data points and the fitted curve. It is a commonly accepted criterion of goodness of fit.

For each of the five companies, at least two time periods were considered. Average annual usage figures were made available by the five companies from 1963 through 1973. The whole 10-year span was used as well as the 1968-1973 interval.

Peak demand figures were obtained from the Northwest Power Pool Coordinating Group for all companies except MPC. These figures are on a July 1 to June 30 basis. The two time spans considered were 1963-1964 to 1972-1973 and 1968-1969 to 1972-1973 for four of the companies. For MPC, peak demand figures for the single time period 1967-1973 were used.

4.1.2.1. Puget Sound Power and Light Company

Puget Sound Power and Light Company has experienced the highest rate of growth of any of the five applicant companies over the last 11 years. Average consumption by ultimate customers has grown from 425 MW in 1963 to 1,052 MW in 1973. The best fit curve for these 11 years of data displays an annual rate of increase of 10.1%. The corresponding curve for the last six years shows an annual rate of increase of 8.4%.

Peak demand grew from 875 MW in 1963-1964 to 2,115 MW in the 1972-1973 operating year. The best fit exponential curve for the 10 years of data exhibits an annual growth rate of 9.7%. The corresponding curve for the 1968-1969 to 1972-1973 period increases at 5.9%. Data for peak and average load are shown in Tables 4-1 and 4-2 and Figure 4-2.

4.1.2.2. Portland General Electric Company

Portland General Electric Company (PGEC) displays the second highest growth rate, going from an average of 590 MW in 1963 to 1,225 MW in 1973. The 11-year best fit exponential curve shows a growth rate of 8.2%, and the comparable growth rate for the last six years is 7.8%.

Peak figures for PGEC fitted to an exponential curve show a growth rate of 8.1% for the 1963-1964 to 1972-1973 period and 7.6% from 1968-1969 to 1972-1973. Figure 4-3 displays the peak and average figures graphically; Tables 4-1 and 4-2 show the data in tabular form.

4.1.2.3. Pacific Power and Light Company

Pacific Power and Light Company (PP&LC) is the largest of the five applicant companies with an average load of 1,635 MW in 1973. In 1963 its average load was 909 MW. Over the 11 years, the best fitting exponential curve shows essentially

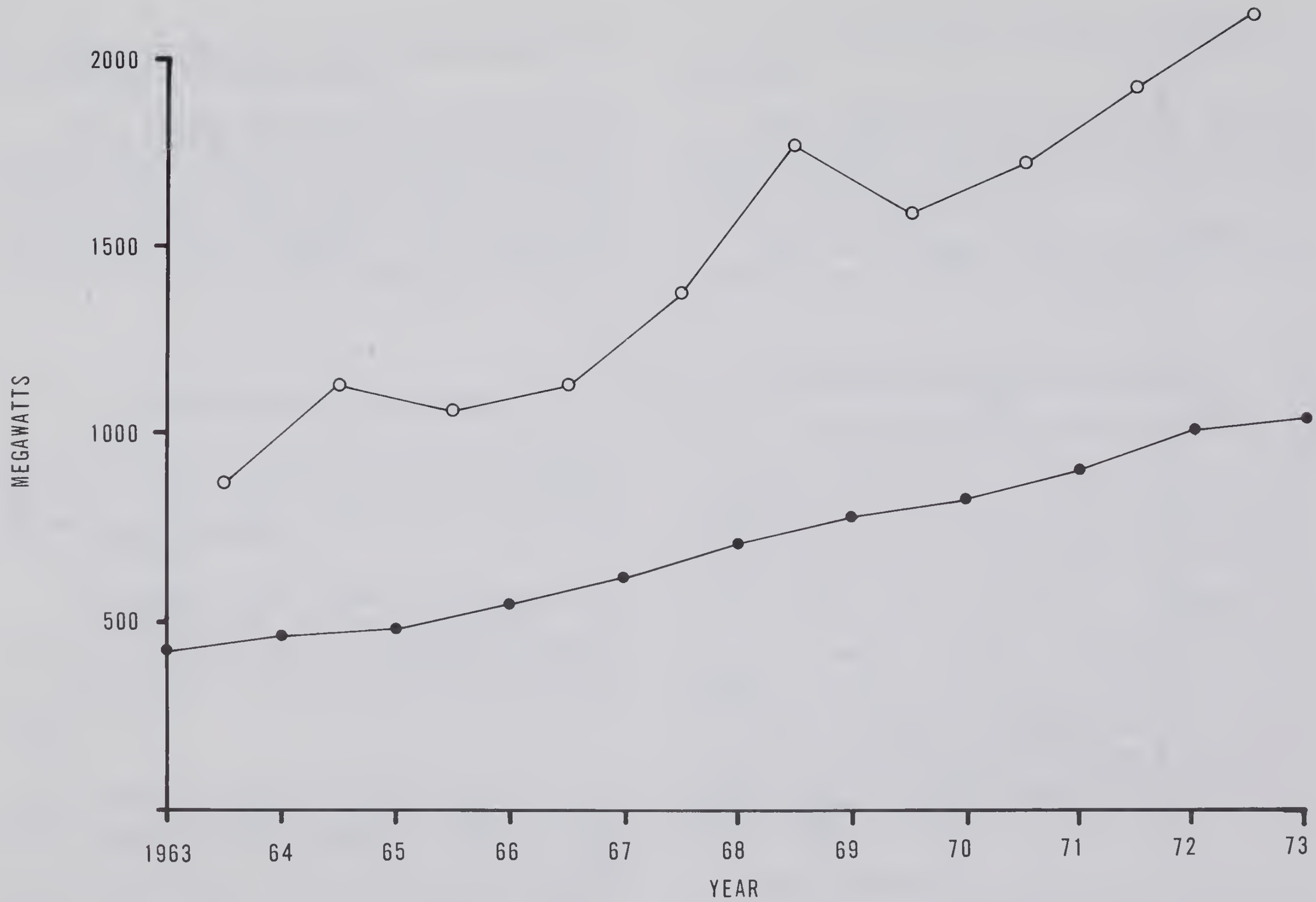

Peak and Average Sales to Ultimate Customers in Megawatts
Puget Sound Power & Light Company

FIGURE 4-2

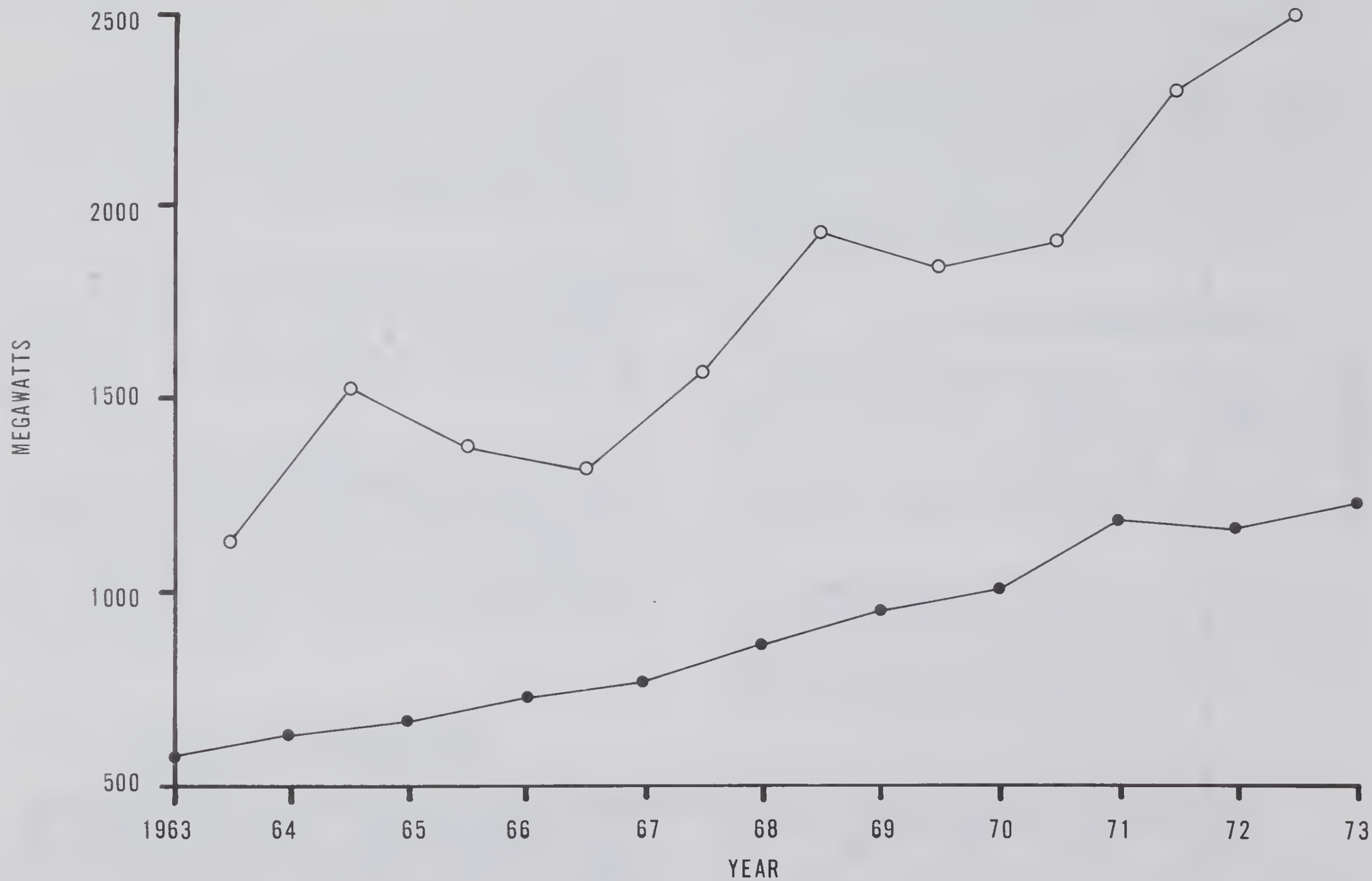

Peak and Average Sales to Ultimate Customers in Megawatts
Portland General Electric Company

FIGURE 4-3

the same growth rate as the corresponding curve for the 1968-1973 period: 6.0%.

Peak figures for PP&LC show an increase in growth rate from 5.6% over the 1963-1964 to 1967-1968 period to 6.6% from 1968-1969 to 1972-1973. This represents the single case (out of 12 possible) where recent growth exceeds the longer term growth rate. Historical data is shown in Figure 4-4 and Tables 4-1 and 4-2.

4.1.2.4. Washington Water Power Company

The average load of Washington Water Power Company (WWPC) has grown from 336 MW in 1963 to 542 MW in 1973. The fitted growth rate for the 11-years of data is 5.1%, it is 4.2% over the last six years.

The growth curve fitted to the WWPC peak load from 1963-1964 to 1972-1973 shows a 5.4% rate of increase. The corresponding curve for the 1968-1969 to 1972-1973 period is 5.0%. The data are shown in Tables 4-1 and 4-2 and in Figure 4-5.

4.1.2.5. Montana Power Company

Montana Power Company shows the lowest growth rate of any of the five applicant companies. Montana Power Company's ultimate customer average load grew from 318 MW in 1963 to 485 MW in 1973. The data for the 11-year period yield an exponential curve whose growth rate is 4.2%. For the last six years the corresponding growth rate is 3.5%.

Peak demand on the MPC system has increased from 712 MW to 830 MW over the 1968 to 1973 time span. The best fitting curve for these years yields a growth rate of 3.9%.

Peak and average load data are shown in Figure 4-6 and in Tables 4-1 and 4-2.

4.2. Projecting the Demand for Electricity

4.2.1. The Importance of Accurate Projections

In any commitment of resources the planning function is important. In power generation it is crucial, since lead times are long and investment sums substantial. Over most of the period since World War II, increased efficiency of fossil fuel units has provided a cushion to the investment decision. Over-investment would mean too many new units, and the result would merely be early retirement or downgrading of a generally much less efficient old unit. At present such a cushion is nonexistent. Thermal conversion efficiency improvements have essentially stopped, and environmental protection constraints have reversed the net efficiency trend at least temporarily.

The implications of these basic changes is that there is a real danger if projected load growth is overstated: that danger is wasted investment and higher than otherwise necessary electric customer rates. On the other hand, low projections would mean less dependable service to

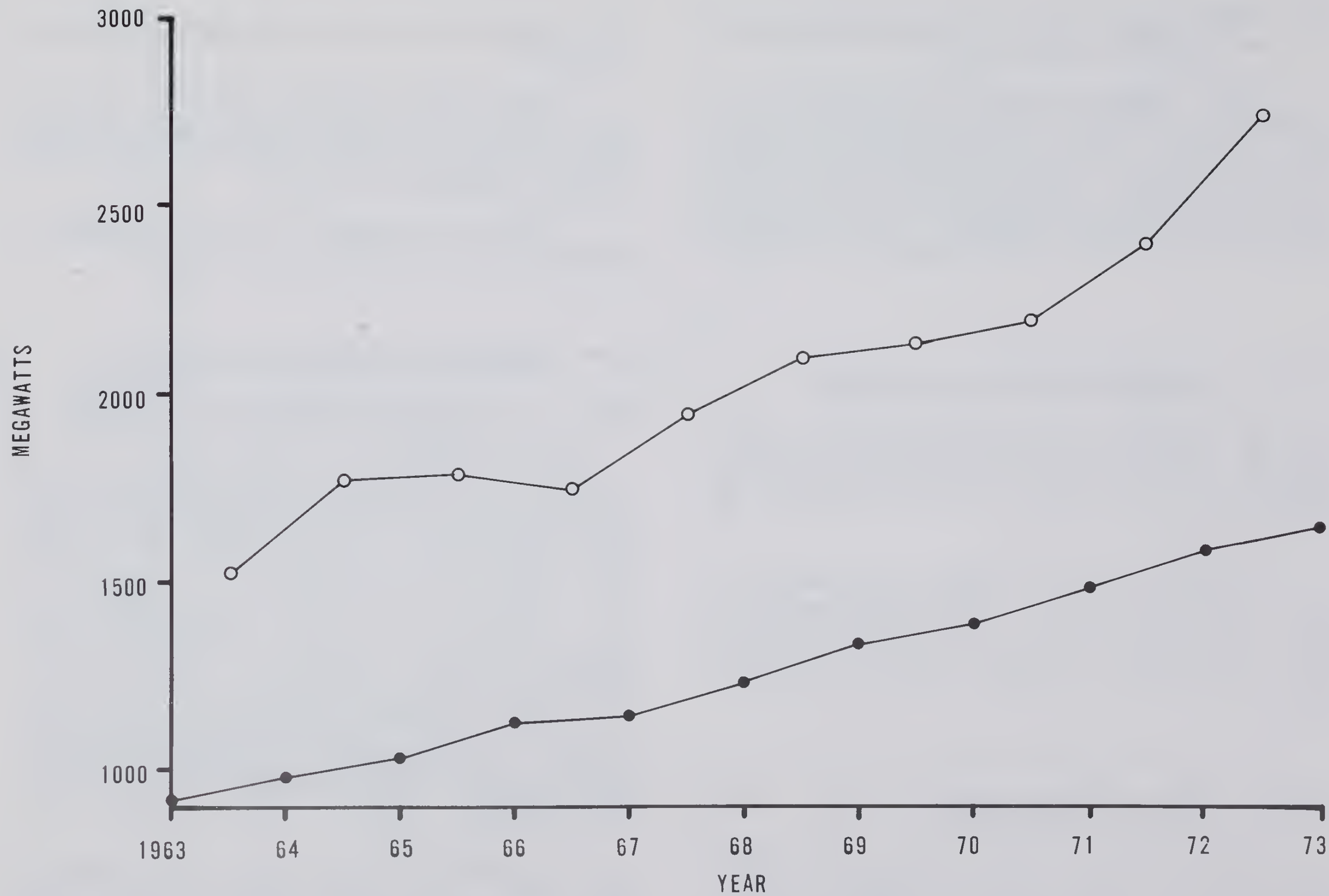

Peak and Average Sales to Ultimate Customers in Megawatts
Pacific Power & Light Company

FIGURE 4-4

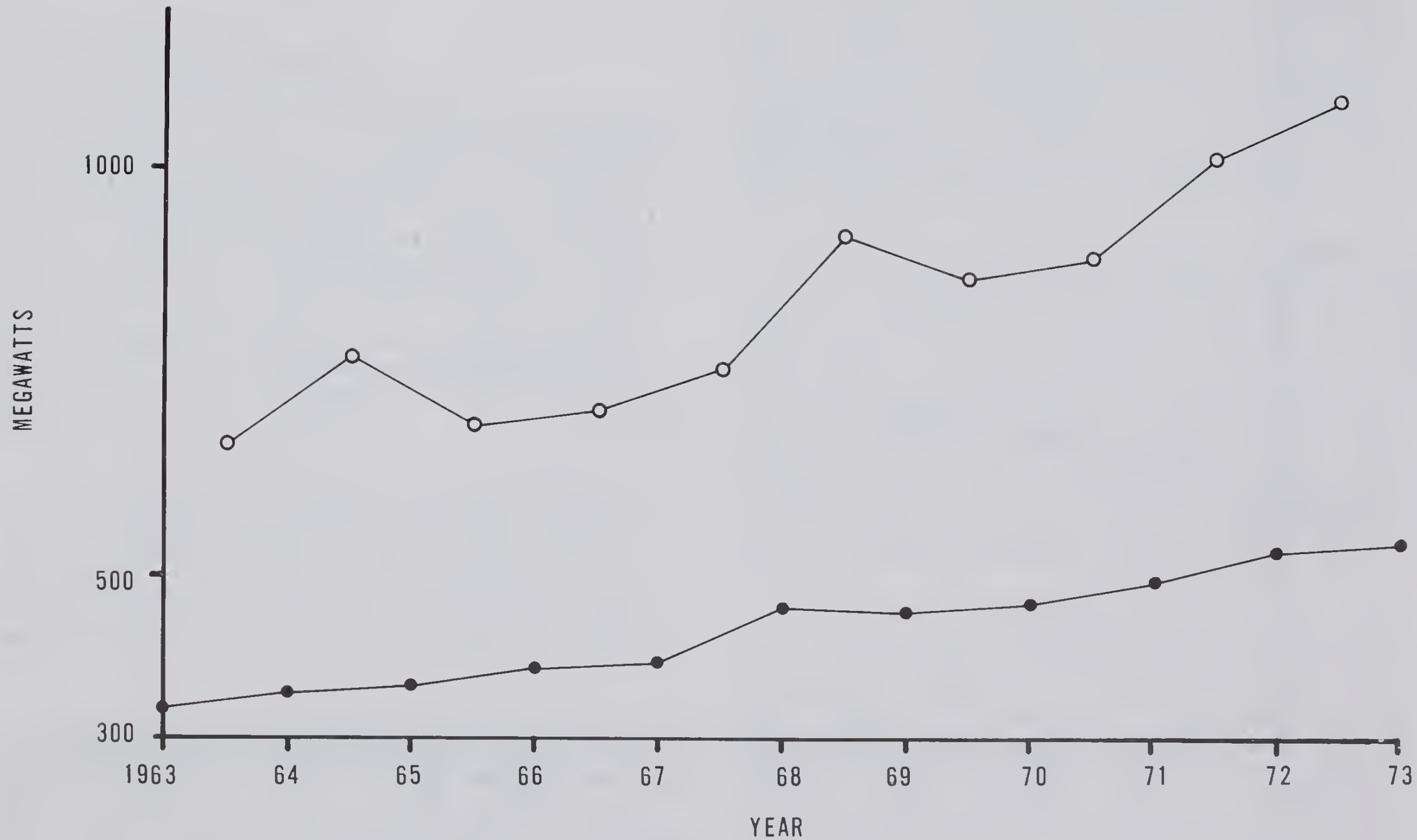

Peak and Average Sales to Ultimate Customers in Megawatts
Washington Water Power Company

FIGURE 4-5

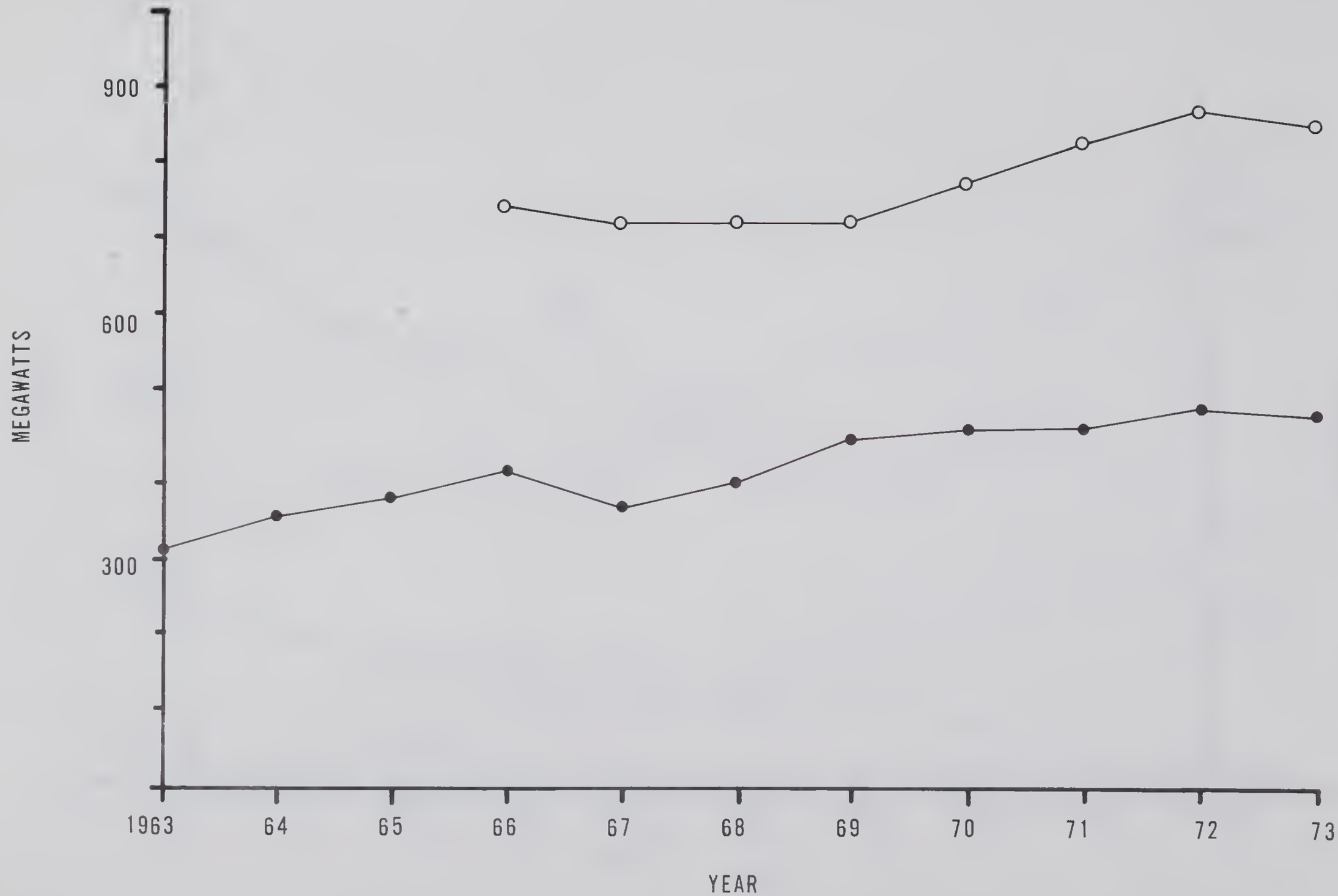

Peak and Average Sales to Ultimate Customers in Megawatts
Montana Power Company

FIGURE 4-6

customers or higher rates than would exist with perfect projections. Thus, inaccurate projections, whether high or low, pose a risk.

4.2.2. The Projection Used

Historical data from the last six years concerning the applicant companies (five years for the Northwest Power Pool) have been used to estimate future energy demand. This may very well lead to overstated estimates, as will be discussed in following sections dealing with the determinants of demand. Using an exponential growth estimate, overestimation of the near future becomes compounded in later years. Therefore, certain events, such as economic stagnation of even relatively short duration, can affect the whole projection series considerably.

The estimated average annual consumption of electricity is shown in Table 4-3. Peak demand is shown in Table 4-4 and is based, for each system, on the average ratio of average energy sales to peak demand over the last five years (six years for MPC). This average ratio is expressed in decimal form on the line entitled "Average Load Factor".

The last line on Table 4-4 is expressed in percentage form ("Maximum Deviation Above Average"). This line quantifies the maximum amount over the five years (six years for MPC) by which the actual peak experienced would have exceeded the peak predicted by using the average load factor and the actual average energy consumption in that year.

4.2.3. Projections for the Northwest Power Pool Area

Projected energy consumption for the Northwest Power Pool is based on data for the last five available operation years. The exponential equation best fitting those five years of data is $Y_i = (14,251)\ (1.0474)^i$, where i=0 is the year 1968-1969, i=1 is 1969-1970, etc. The projections are shown in Table 4-3. As shown there, Northwest Power Pool figures have been adjusted forward one-half year to put them on a calender year basis.

The figures in Table 4-5 show the presently installed capacity and planned additions to that capacity through the year 1984. Over the next 10 years total capacity will increase by 71% if retirement of existing capacity is assumed to be zero. The biggest increase is in fossil fuel and nuclear generating capacity, which totaled 5,502 MW in 1973 and will be 20,225 MW in 1984. These figures include Colstrip Units 1 and 2 but do not include Units 3 and 4. The share of total generating capacity made up of fossil fuel and nuclear capacity will more than double by 1984.

Care must be exercised in interpreting Table 4-5; the capacity figures included do not show name plate ratings of units, but rather, peak capability. They show potential output for a short period of time (one hour) under optimum conditions. The name plate rating of any individual unit would indicate the output sustainable without doing physical damage to the unit and would generally be lower than the peak capability. Name plate rating would be 4% to 5% less than peak capability over the total Northwest system.

TABLE 4-3

ESTIMATED ANNUAL AVERAGE ENERGY SALES TO ULTIMATE CUSTOMERS

YEAR	PSP&LC	PGEC	PP&LC	WWPC	MPC	NWPP[1/]
Actual 1973	1052	1225	1635	542	485	
Projected[2/] 1973	1071	1278	1648	540	502	17553
Projections						
1974	1162	1377	1747	563	520	18385
1975	1260	1484	1851	586	639	19256
1976	1367	1599	1962	610	658	20169
1977	1482	1724	2079	636	678	21125
1978	1607	1858	2203	662	698	22127
1979	1743	2002	2334	690	719	23175
1980	1890	2158	2474	718	741	24274
1981	2049	2325	2621	748	763	25425
1982	2222	2506	2778	779	786	26630
1983	2410	2701	2944	811	810	27892
1984	2613	2910	3120	845	835	29214
1985	2834	3137	3306	880	861	30599
1986	3073	3380	3503	917	888	32049
1987	3333	3643	3712	955	915	33568
1988	3614	3926	3934	994	944	35159
1989	3919	4231	4169	1036	974	36826
1990	4250	4560	4418	1079	1004	38571
1991	4608	4914	4681	1123	1036	40391
1992	4997	5296	4961	1170	1069	42315
1993	5419	5707	5257	1218	1103	44320
1994	5876	6151	5571	1269	1138	46421
1995	6372	6629	5904	1322	1174	48622

1/ NWPP figures have been adjusted forward 6 months to be on a calendar year.

2/ 1973 projections have been derived from application of the same formula to historical data beginning in 1968

TABLE 4-4

ESTIMATED PEAK DEMAND FOR FIVE APPLICANT COMPANIES AND NORTHWEST POWER POOL
(MW)

YEAR	PSP&LC	PGEC	PP&LC	WWPC	MPC	NWPP
1974	2301	2569	2709	1072	880	27563
1975	2495	2769	2869	1116	1011	28870
1976	2707	2983	3042	1162	1043	30238
1977	2935	3216	3223	1211	1077	31672
1978	3182	3459	3416	1261	1111	33174
1979	3451	3735	3619	1314	1147	34745
1980	3743	4026	3836	1368	1184	36393
1981	4057	4338	4064	1423	1221	38118
1982	4400	4675	4307	1484	1260	39925
1983	4772	5039	4564	1545	1301	41817
1984	5174	5429	4837	1610	1343	43799
1985	5612	5853	5126	1676	1387	45876
1986	6085	6306	5431	1747	1433	48049
1987	6600	6797	5755	1819	1478	50327
1988	7156	7325	6099	1893	1527	52712
1989	7760	7894	6464	1973	1578	55211
1990	8416	8507	6850	2055	1629	57828
1991	9125	9168	7257	2139	1683	60556
1992	9895	9881	7691	2229	1739	63441
1993	10731	10647	8150	2320	1796	66447
1994	11636	11476	8637	2417	1856	69597
1995	12618	12368	9153	2518	1917	72897
Average Load Factor	0.505	0.536	0.645	0.525	0.591	0.667
Maximum Deviation Above Average	13%	9%	7%	7%	5%	3%

Notes: Average load factor applied to figures in Table 4-3. Average load factor calculated from Table 4-1 and Table 4-2 using the following time spans: PSP&LC, PGEC, PP&LC and WWPC peaks from last five operating years compared to average energy figures from last five calendar years; MPC, from Table 4-1 and Table 4-2, 1968-1972 (1975-1995 adjusted for Anaconda contract); NWPP, from Table 4-1 and Table 4-2, 1968-1969 to 1972-1973. Maximum deviation above average is for same time span.

TABLE 4-5

NORTHWEST POWER POOL TOTAL CAPABILITY AS OF 12-31-73
AND PLANNED ADDITIONS THROUGH 1984
All Figures are in Megawatts

	Generation Type						
	Hydro		Fossil		Nuclear		Total Capability*
Existing Capacity as of 12-31-73	28,501		4,662		860		34,023
Additions:							
1974			1,429				35,452
1975	1,691		880		1,130		39,153
1976	1,518		880				41,551
1977	2,041		415				44,007
1978**	2,382		589				46,978
1979**	219		415				47,612
1980	466		500		2,360		50,938
1981	321		500		3,890		55,649
1982	432		415				56,496
1983	363						56,859
1984					1,300		58,159
Totals	37,934	+	10,685	+	9,540	=	58,159

*Total capability assumes no retirements of existing plants during period considered

**Colstrip Units 3 and 4 not included

Source: Compiled from information furnished by Northwest Power Pool

A second consideration, particularly important for a system so heavily made up of hydro capacity, is the storage capacity behind individual dams and dam sequences and the relationship between this storage capacity and variations in the natural stream flow rates. While hydro electric generation has by far the lowest operating costs, it is vulnerable to the fluctuations of nature.

A third factor which must be considered in looking at Table 4-5 is that no allowance for maintenance is included. In balancing load and resources, loss of capacity for scheduled maintenance would have to be considered.

A final factor to be considered for the system as a whole would be an estimate of line losses. These would have to be subtracted from generation capability to arrive at the delivered capability of the system.

4.2.4. Projections for the Applicant Companies

For each of the five applicant companies, projections were based on best fit exponential curves fitted to six years of data, from 1968 to 1973. In all cases this yielded a lower rate of growth than during the 1963-1973 period. How this difference in time period is interpreted is crucial. It is important to put more weight on the most recent data, since it is generally held that the most recent data is the best indicator of future trends. Using the shorter time period is one way of obtaining this weighting.

There are at least three possible ways to interpret the differences displayed in the two time periods.

1) No change in the basic growth rate has occurred. The long term growth rate is dominant. The short term is merely a temporary perturbation and therefore understates future growth.

2) A basic change in growth rate has occurred. The short term rate is merely the start of a new long term rate, which is best approximated by the short term rate.

3) A basic change in growth rate is occurring. The short term rate only reflects a part of that change, and so overstates future growth.

None of these three possibilities considers underlying causal factors. Without reference to underlying causes, use of the short term rate appears to be most logical.

4.2.4.1. Puget Sound Power and Light Company

Puget Sound Power and Light Company sales are projected by the equation $Y_i = (714.778)(1.0844)^i$ where $i=0$ is the year 1968. This growth rate of 8.44% represents nearly a 17% decrease in the rate of growth as compared to 1963-1973 estimates.

The capacity owned by PSP&LC as of December 31, 1973, totaled 525 MW. Compensating for the small amount of company owned capacity are a number of long term purchase contracts with publicly owned hydroelectric facilities on the Columbia River. These purchase contracts add 1,694 MW to company resources. An additional 1,742 MW of nuclear and fossil capacity are planned or under construction. Table 4-6 provides a more complete picture of PSP&LC generating capacity.

By the middle of the 1980's PSP&LC owned and purchased capacity will equal nearly 4000 MW. This figure does not include Colstrip Units 3 and 4, and by 1985 there could be further additions not listed here. Projected peak and average loads for 1985 are 5612 MW and 2834 MW, respectively (see Tables 4-3 and 4-4).

4.2.4.2. Portland General Electric Company

The best fitting exponential curve with which PGEC sales are projected is $Y_i = (878.995)(1.0777)^i$. Again, $i=0$ is the year 1968. This equation represents a decrease in growth rate from 8.24% based on 1963-1973 to 7.77% for the shorter period.

The total generating capacity existing in the PGEC generating system is 1,162 MW. Five installations are fossil fuel fired with a combined capacity of 496 MW; the remainder of the existing capacity consists of hydro units. An additional 1,202 MW of capacity is under construction, and another 1,449 MW of capacity is planned. Total capacity will then equal 3,813 MW, with some 82% of that capacity made up of fossil fuel and nuclear units. A more detailed presentation is made in Table 4-7.

Total capacity of 38.13 MW compares to the projected 3137 MW of average energy sales and 5853 MW of peak load in the year 1985 shown in Tables 4-3 and 4-4. This capacity figure does not include Colstrip Units 3 and 4, and further additions by 1985 are possible beyond those listed in Table 4-7.

4.2.4.3. Pacific Power and Light Company

The comparison of time periods for PP&LC shows little difference in growth rates. The equation of the exponential curve fitted to the 1968-1973 data, which is used for the projections, is $Y_i = (1,233.590)(1.0597)^i$.

Compared to other generating systems in the Northwest, PP&LC has a large amount of fossil fuel generating capacity. The total existing capacity of 2,347 MW is made up of nearly 60% fossil fuel units. Planned additions call for 3,514 MW of new capacity, of which all but 500 MW will be either fossil fuel or nuclear. This system will be quite sheltered from the oscillations of stream flow, with existing and planned additions equal to 5,861 MW, of which 4,337 will be either fossil or nuclear. These figures are shown in Table 4-8.

This total capacity of 5861 MW can be compared to projected average and peak load figures for 1985 of 3306 MW and 5126 MW, respectively (see Tables 4-3 and 4-4).

TABLE 4-6

PUGET SOUND POWER & LIGHT COMPANY
GENERATING FACILITIES

Plant Name	Plant Type	PSP&LC Owned Capacity, KW[1]
Existing Capacity Owned		
Baker River - Lower	H	71,400
Baker River - Upper	H	103,000
Electron	H	26,400
Nooksack	H	1,700
Snoqualamie Falls	H	44,000
White River	H	63,400
Shuffleton	F	85,800
Centralia	F	98,000
Crystal Mountain	F	2,850
South Whidbey	F	28,500
Total Capacity Owned		525,050

[1] A megawatt equals 1,000 kilowatts

TABLE 4-6
(continued)

Plant Name	Plant Type	PSP&LC Owned Capacity, KW
Planned Capacity		
Whitehorn	F	60,000
Colstrip 1 & 2	F	350,000
Skagit 1 & 2	N	1,270,000
WPPSS 3[2/]	N	62,000
Total Planned Capacity		1,742,000
Substantial shares of the output of the following publicly owned hydroelectric facilities on the Columbia River are purchased by PSP&LC through long-term contracts:		
Wells	H	425,000
Rocky Reach	H	768,000
Rock Island	H	219,000
Wanapum	H	152,000
Priest Rapids	H	130,000
Total Purchased Public Power		1,694,000

Key: H - Hydro
N - Nuclear
F - Fossil

2/ An unnamed unit

Source: Puget Sound Power & Light Company

TABLE 4-7

PORTLAND GENERAL ELECTRIC COMPANY
GENERATION FACILITIES

Plant Name	Plant Type	PGEC Owned Capacity, KW
Existing		
Oak Grove	H	49,000
North Fork	H	54,000
Faraday	H	44,000
River Mill	H	23,000
Bull Run	H	22,000
Round Butte	H	330,000
Pelton	H	124,000
Sullivan	H	15,500
Summit	F	5,500
Station L	F	75,500
Harborton	F	257,000
Bethel	F	123,000
Centralia (2.5%)	F	35,000
Total Existing		1,162,000

TABLE 4-7
(continued)

Plant Name	Plant Type	PGEC Owned Capacity, KW
Under Construction		
Beaver	F	439,000
Trojan	N	762,750
Total Under Construction		1,201,750
Planned		
Boardman	F	500,000
Boardman (65%)	N	819,000
WNP-3 (10%)	N	130,000
Total Planned		1,449,000

Key: H - Hydro
N - Nuclear
F - Fossil

Source: Portland General Electric Company

TABLE 4-8

PACIFIC POWER & LIGHT COMPANY GENERATING FACILITIES

Plant Name	Plant Type	PP&LC Owned Capacity, KW
Existing		
Swift #1	H	268,000
Yale	H	135,000
Merwin	H	150,000
Condit	H	15,000
Naches	H	5,000
Powerdale	H	6,600
Big Fork	H	5,000
Bend	H	1,100
Drop	H	1,400
Cline Falls	H	1,100
Wallowa Falls	H	1,100
Albany	H	500
Stayton	H	600
Copco One	H	26,500
Copco Two	H	30,000

TABLE 4-8
(continued)

Plant Name	Plant Type	PP&LC Owned Capacity, KW
Existing (cont.)		
Iron Gate	H	20,000
Fall Creek	H	2,300
East Side	H	3,300
West Side	H	800
John C. Boyle	H	88,000
Prospect One	H	4,700
Prospect Two	H	36,800
Prospect Three	H	7,800
Prospect Four	H	1,300
Eagle Point	H	3,200
Toketee	H	44,900
Slide Creek	H	20,000
Soda Springs	H	12,700
Fish Creek	H	12,400
Clearwater #1	H	18,700

TABLE 4-8
(continued)

Plant Name	Plant Type	PP&LC Owned Capacity, KW
Existing (cont.)		
Clearwater #2	H	32,000
Lemolo #1	H	33,000
Lemolo #2	H	35,100
Dave Johnston #1,#2,#3,#4	F	758,000
Centralia #1,#2*	F	475,000
Lincoln	F	47,800
Trona	F	15,600
Libby	F	26,600
Total Existing		2,346,900
Planned		
Jim Bridger #1 - #4	F	1,334,000
Trojan	N	28,000
Wyodak	F	198,000
Yale Addition	H	500,000*

TABLE 4-8
(continued)

Plant Name	Plant Type	PP&LC Owned Capacity, KW
Planned (cont.)		
WPPSS #3	N	125,000
Skagit #1	N	258,000*
Boardman #1	N	315,000*
PP&L Nuclear #1	N	756,000*
Total Planned		3,514,000

Key: H - Hydro
N - Nuclear
F - Fossil

*Capacity based on tentative share of output.

Source: Pacific Power & Light Company

4.2.4.4. Washington Water Power Company

The WWPC equation used in projecting future sales displays a growth rate of just over 4%. This is about 18% below the growth rate based on the longer 1963-1973 time period. The equation used is $Y_i=(440.883)\ (1.0415)^i$.

The WWPC capacity figures are shown in Table 4-9. Existing capacity is 925 MW with approximately 228 MW consisting of fossil fuel units and the remaining 697 being hydro capacity. Planned additions will consist of the partial output of two new nuclear units and will add 194 MW to WWPC capacity. The resulting total capacity figure of 1,119 MW compares to projected 1985 peak and average load figures of 1676 MW and 880 MW, respectively (see Table 4-3 and 4-4).

4.2.4.5. Montana Power Company

A series of estimates were made for MPC. This was possible because more information was available for this company. Of the five applicant companies, MPC's sales show the most erratic behavior, and so leave the estimator most uneasy. A few illustrative examples follow.

1) For the 11 years that data on the sales to ultimate customers were used (1963-1973 inclusive), three of the 10 possible years (1967, 1971 and 1973) showed sales of less than the previous year (Table 4-1).

2) Use of different time periods gives quite different results, as shown in the following time periods and average annual growth rates:

1963-1973	4.3%
1968-1973	3.9%
1970-1973	1.1%

3) If one were to look only at the data for either the 11 years (1963-1973 inclusive) or the six years (1968-1973 inclusive) and fit curves to that data, the surprising result emerges that, for both time periods, a straight line fits the data better than an exponential curve. The difference between the two lines for projection purposes is enormous and increases with time.

4) The historical data broken down between industrial, residential and commercial sales show residential and commercial growing quite smoothly at about $5\frac{1}{2}$% and 7%, respectively. The industrial load is not only the most erratic (e.g., industrial sales were larger in 1966 than in 1973), but is also the largest, accounting for 50% of the total sales to ultimate customers in 1973. Projecting for industrial sales alone is very uncertain.

The data and the resulting average growth rates (point 2 above) are plotted in Figure 4-7. The three average annual growth rates are

TABLE 4-9

THE WASHINGTON WATER POWER COMPANY
GENERATING FACILITIES

Plant Name	Plant Type	WWPC Owned Capacity, KW
Existing		
Little Falls	H	32,000
Long Lake	H	70,000
Upper Falls	H	10,000
Nine Mile	H	12,000
Monroe Street	H	7,200
Meyers Falls	H	1,200
Post Falls	H	11,250
Cabinet Gorge	H	200,000
Noxon Rapids	H	282,880
Othello	F	28,200
Centralia	F	199,470
Noxon Addition	H	70,720
Total Existing		924,920

TABLE 4-9
(continued)

Plant Name	Plant Type	WWPC Owned Capacity, KW
Planned		
WPPSS #3	N	65,000
Skagit	N	129,000
Total Planned		194,000

Key: H - Hydro
N - Nuclear
F - Fossil

Source: Washington Water Power Company

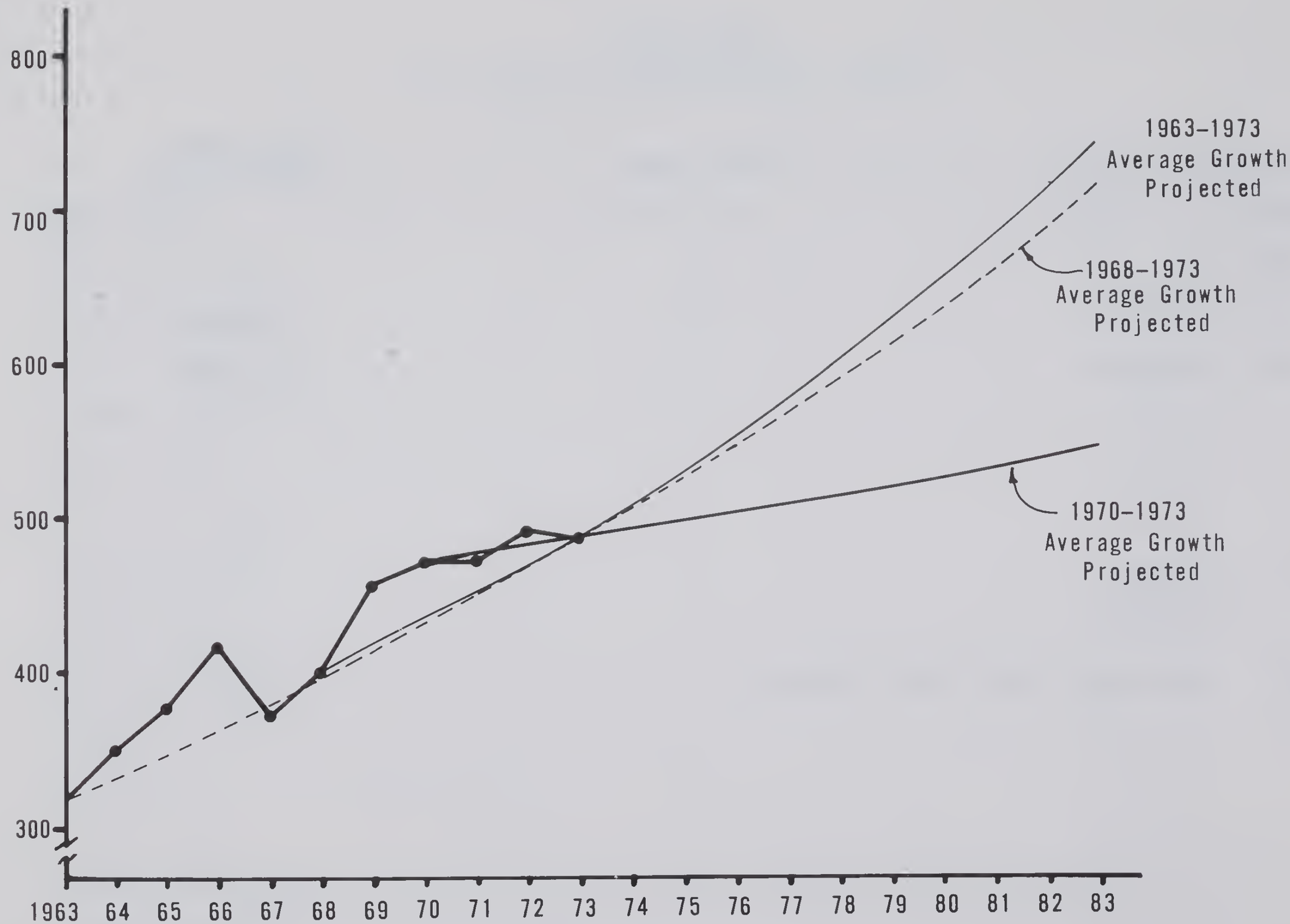

Sales to Ultimate Customers; Historical Data 1963–1973
Projections to 1983 Based on Most Recent 3, 5 and 10 Years Data
Montana Power Company

FIGURE 4–7

extended forward 10 years to demonstrate the significance of the differences.

Projections made for MPC in Table 4-3 are based on the best fitting exponential curve utilizing the 1968-1973 total sales to ultimate customers data. The equation is $Y_i=(422.868)(1.0351)^i$. Superimposed upon the exponential projection is a 101 MW addition to the Anaconda Company load assumed to begin in 1975 and assumed to be at a 100% load factor. The projection of MPC load through 1991 is shown in Figure 4-8. Data for 1963-1973 is also shown, together with a $5\frac{1}{2}$% growth curve from 1963 forward. This is the figure that MPC uses when talking of present growth rates (Montana Power Company's Long Range Plan 1974), presumably based on past history.

The projections for the five applicant companies and the Northwest Power Pool were shown in Tables 4-3 and 4-4. Having made these projections on the historical record of the past five or six years, some discussion of underlying causal factors is in order.

4.3. Historical Projections (Will the Future Conform to the Past?)

In the past, rates of growth of electrical consumption have been high. Why any particular growth rate has occurred has not received nearly enough investigation, and too much emphasis has been given to "intrinsic" or "natural" growth rates. The concept that consumption of electricity is a function of time, while devoid of any theoretical justification, has implicitly been accepted.

Any careful consideration of what determines the level of electric consumption must reject the belief that time itself is the motivating force. Looking behind past growth rates, it can be postulated that many things affect the level of electricity consumed. Even a partial listing would have to include population changes, production levels, income, the price of electric appliances, and the price of electricity itself, as compared to the general price level and particularly as compared to the price of close substitutes (gas, oil). In addition to these factors, past promotional activities should also have affected past growth.

Over most of the past 25-year period many of the determinants of electric consumption listed above have moved in a direction favorable to increased electric consumption and therefore provide considerable explanation of past trends. Gross National Product (GNP) has grown strongly, if not as steadily as some would wish; population has burgeoned from approximately 151 million in 1950 to nearly 204 million in 1970; and the real price of electricity to the consumer has dropped impressively, at least until the late 1960's, while the prices of all fuels have been rising quite smoothly since before World War II (BPA 1973).

In contrast to the past record, many determinants of electric consumption are expected to move in a less favorable direction over the next several years. Real GNP has shown an absolute decline in the first three quarters of 1974, and, although some optimistic sources talk of recovery by the end of 1975, most responsible analysts expect an adjustment period of at least four to

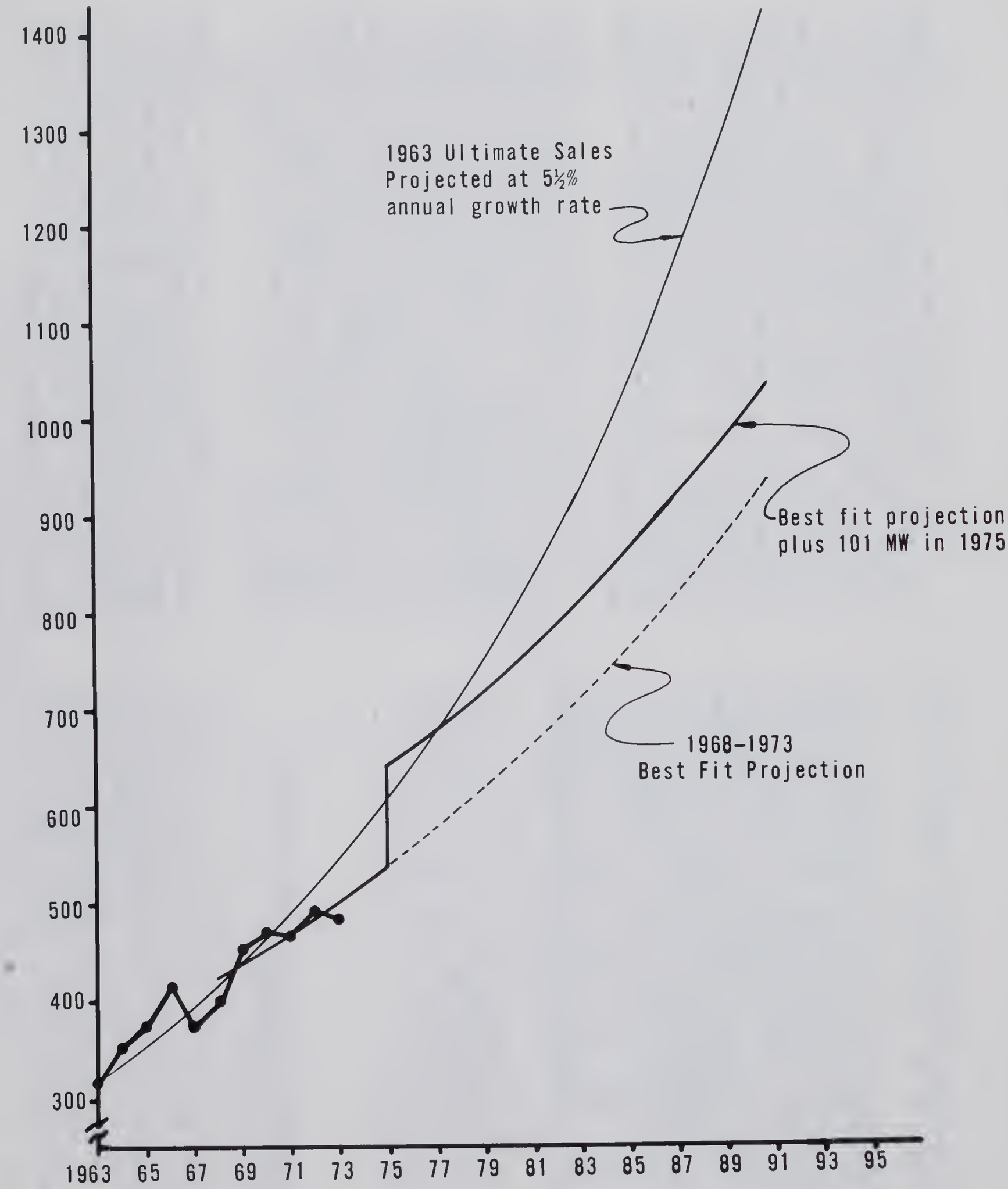

Projections MPC Average Sales to Ultimate Customers

FIGURE 4-8

five years. The most recent population projections show a growth rate over the 1970-1990 period of less than 60% of the previous 20 years' growth rate.

While population growth and production increases appear to be lagging far behind the recent past historical rates, the changes in the price of electricity have been upward since the late 1960's, after years of decline. Further it is expected that increasing prices for electricity are going to continue in the future. These increased prices will result from many causes, including environmental legislation, increased fuel costs, dilution of low cost hydro systems with increased thermal capacity, and extremely rapid increases in costs of plant equipment.

The responsiveness of consumption levels to price changes may be especially crucial if two tier pricing, as considered by BPA were ever instituted (BPA 1973). Under such a scheme, the full costs of new generation would be passed on only to those customers whose increased consumption necessitated new facilities, rather than having all customers share the average costs of all generation equally. This would have substantial impacts in the Northwest, where the present low cost hydro generation dominates the installed generating capacity. Additions to capacity will be heavily made up of higher cost steam units, such as the Colstrip units.

4.3.1. Changing Causal Factors in Montana

Several factors related to the demand for electricity are undergoing changes both nationally and in Montana.

4.3.1.1. Population Growth

At the 1972 rate hearings (Public Service Commission 1972), MPC pointed out that one reason its "operating revenues" were lagging behind those of other electric utilities was that "... population growth in Montana during the last ten years, and population growth of Montana Power Company's service area during the same period, was substantially less than half the average population growth of the United States." If this was unfortunate from MPC's perspective, the most recent population projections by the Bureau of Economic Analysis of the Department of Commerce (Survey of Current Business 1974) paint an even more bleak picture for the coming decade and a half. Those projections, reproduced in Table 4-10, indicate a loss of 39,000 people by 1980 and an additional loss of 5,000 people by 1990. These projections are based on a combination of demographic and economic analysis. The population is assumed to respond to economic incentives, leaving areas where there are few jobs and low pay for areas of greater employment opportunity and higher pay. The Bureau of Economic Analysis argues that "(P)rojections of the type presented here can be useful in an assessment of future public and private demands for goods and services...(and) demands for physical capital related to energy..." (Survey of Current Business 1974, p. 19). It is for the latter reason that this study emphasizes these projections.

Table 4-10

MONTANA POPULATION PROJECTIONS 1970-1990

1970	1971	1980	1990	percent change 1971-1990
697,000	709,000	670,000	665,000	-2%

A study of the income projections by industry which accompany these population projections indicates that the study probably did not take adequately into account the growing coal-related industries in eastern Montana. These new (lower) population projections are largely the result of incorporating the currently lower birth rates into the Office of Business Economics and Economic Research Service projection model.

A just completed study (Polzin 1974) of the likely impact of coal-related development in eastern Montana by the Bureau of Business and Economic Research of the University of Montana allows these population figures to be crudely adjusted to take that development into account. The Polzin study projects only to 1985. It assumes that both Units 3 and 4 and another 1,000 MW complex will be built. In addition, it assumes that two 250 MMscf gasification plants will come on line by 1985 and that up to 50 million tons of coal will be mined solely for export. Projecting the direct and indirect employment this development would generate, the study then uses the "cohort survival" method to project the population necessary to provide these employees. The result is a projection that by 1985 the development will need a population of 30,000 people. If no gasification plants are built, the needed population would be 20,000 people. Some will come from eastern Montana; some from elsewhere in the state. They will not all necessarily be new population to the state.

Adding 30,000 people to the Department of Commerce population forecasts, then, can be considered a more than adequate adjustment for coal development. But even adding all 30,000 people to the projections (Table 4-10) still leaves the population in 1985 and 1990 between 9,000 and 14,000, respectively, lower than in 1971.

No doubt the model used for these projections can be questioned. But until it is shown to be inaccurate, serious doubt must be raised about the prospect of substantial increase in demand based on population growth.

It is possible that the population in the state could decline, but that the population in the MPC service area would continue to rise. MPC serves primarily urban areas, leaving the rural areas to the Rural Electric Associations. A continued shift of the Montana population from rural to urban areas as a result of rising farm productivity and increased urban employment opportunities could lead to such a situation. There is, however, a limit to how much these areas can grow if the overall population of the state is declining. Finally, MPC at the 1972 rate hearings (Public Service Commission 1972) seemed to

suggest that over the last decade the population of the state and of its service area varied in a parallel manner.

4.3.1.2. Effects of Increased Price of Electricity

One explanation for the slowing in the rate of increase in the demand for electric energy in recent years is tied to the historical trends in the price of electric energy. According to the Edison Electric Institute (1973a), the cost of a unit of electricity to a residential user has declined continuously since the turn of this century. However, since 1969 it has started to rise. If these electric energy prices are put in terms of constant dollars (inflation taken into account), the decline in price is even more dramatic and continued until 1970, when for the first time the real cost of electric energy began to rise (Chapman et al. 1972). That is, until 1970, electric energy (and the appliances and machinery which used it) became a better and better buy, year after year.

It is not surprising to an economist that consumers, faced with a steadily falling price, steadily increased their purchases. It would also not be surprising to an economist if rising real prices of electric energy lead to a slowing of the rate of increase in consumption. Just such a rise in the real cost of electric energy is predicted by most observers (Chapman et al. 1972). The 1972 Cornell-National Science Foundation Workshop on Energy and the Environment concluded that over the next two decades the price of electric energy in constant dollars would rise 50%. Two years earlier the 1970 National Power Survey predicted a modest increase of 19%, in constant dollars (Chapman et al. 1972).

Rising real costs of electricity will affect the demand for electricity; they will reduce demand below what it otherwise would be. There is little dispute over this among those who have studied the relationship between electric prices and the quantity of electricity demanded. The BPA in preparing its impact statement on the BPA proposed rate increase, reviewed all work done on this relationship over the last decade and carried out a study of its own design in the Pacific Northwest (BPA 1973). These studies generally conclude that "...the price of electricity is the major determinant of the volume of electricity consumed" (Wilson 1971, p. 12). "Consumption of electricity is responsive to price; the higher the price, the less electricity consumed" (BPA 1973, p. iv).

The extent of the relationship is indicated in the crossectional data plotted in Figure 4-9. Residents of Washington, facing prices about one-third those faced by residents of the Middle Atlantic states, consume on the average almost three times as much electricity per month.

The sensitivity of demand to changes in price is termed by economists the price elasticity of demand (or simply the elasticity of demand). Estimates of this sensitivity to a 10% increase in the real cost of electricity range from an 18% decline in demand by industrial users to a 6%-13% decline in residential use (BPA 1973, p.69).

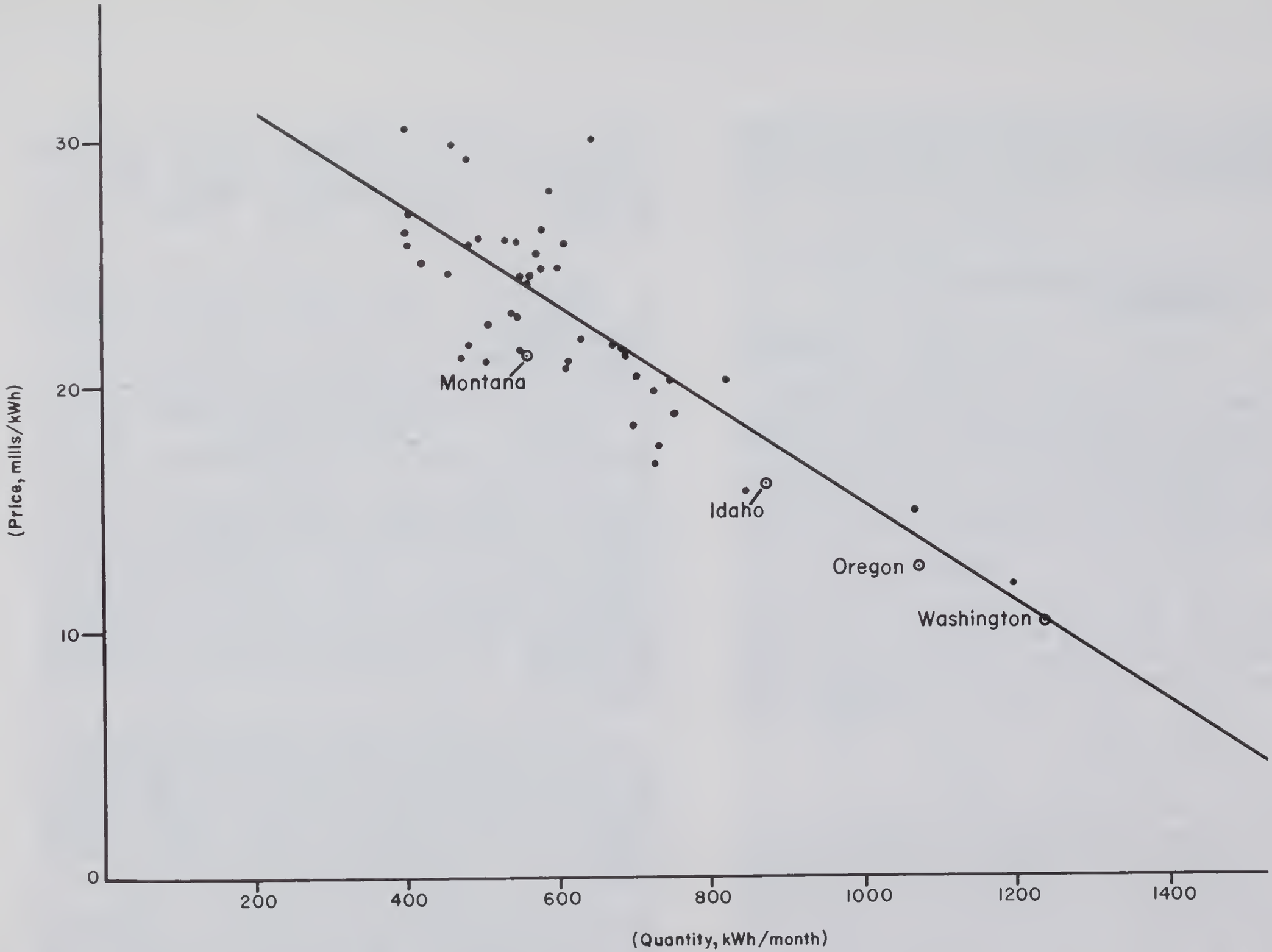

RESIDENTIAL ELECTRICITY, 1971
(Price and Consumption by State)

Data Source: Impact Study: BPA Proposed Rate Increase
Bonneville Power Administration, November 1973

FIGURE 4-9

All of these "declines" are relative to what the demand would have been had electric prices not risen. Other factors such as rising incomes, rising costs of other types of energy, the lack of convenient alternative sources of energy, etc., might well increase demand for electric energy and thus offset the decline due to the higher costs. But the dampening effect of the higher costs will still be felt.

On the other hand, projected changes in these offsetting-type forces might lead one to expect a more than offsetting rise in the demand for electricity. If, for instance, natural gas or fuel oil were not available as residential and industrial fuels or if they were available only at non-competitive prices, a region might well have to progessively turn to electric energy for most of its energy needs. This switch would lead to rapid increases in the demand for electric energy even though its real price was rising. Similarly, if real incomes begin to rise significantly faster in the future than in the past, users might feel that they can afford additional electric energy even though its price is rising.

These possibilities will be discussed in more detail below. The point is that present and future price increases for electricity will have an effect on future consumption of electricity. The current sharp decrease in the growth rate of electric consumption nationally supports this position, and long term adjustment should be more thorough than the immediate impact. Chapman et al. (1972, p. 705) estimate that only 10% of the full effect of a price rise on demand is experienced in the first year and that it takes seven to eight years for 50% of the total dampening effect on demand to occur. This means that it will take 10 to 20 years for the full impact on demand to take effect. Current price rises will still be working toward lowering demand in the 1980's.

4.3.1.3. The Rate of Economic Growth

If the state or national economy were to expand more rapidly during the next 15 years than during the last 15 years, rising per capita incomes and rising industrial activity might overwhelm the retarding influence on electrical demand of the rising real prices.

Such a faster rate of growth, however, is predicted by no prominent economist. The opposite sort of predictions are repeatedly made. The decade of the 1960's was one of rapid, uninterrupted economic growth unparalleled in our history (U.S. Department of Commerce 1970b). The rate of growth of real per capita GNP during the 1960's was over twice the rate in the 1950's. Precluding some major change in world events (such as the outbreak of war), that performance will not be repeated during the next decade. The tight money policy adopted by the Federal Reserve Board and the restrictive government spending program proposed by the Administration, both intended to control inflation by slowing the growth of total demand, can be expected to retard economic expansion. It is expected that these programs will have to remain in effect for at least a year and a half to two years if not longer. The impact of the tight money policy and high interest rates is to discourage investment

in new plants and equipment and therefore to reduce the size of the nation's future economic base. Finally, productivity is not growing as fast as it was in the 1960's, leading the Department of Commerce to reduce increases in productivity projected for the next 15 years (Survey of Current Business 1974).

All of this suggests a slower growing, not a faster growing, national economy. Montana will not be isolated from these trends. Coal-related development in eastern Montana will be an offsetting force, and, to the extent that "shortages" of food, lumber and mineral products continue, much of Montana's economic base should continue to prosper. However, tight money is already reducing the housing market that the lumber industry depends upon, and it seems unlikely that the state can completely isolate itself from national economic trends. The 1970 Montana Economic Study by the University of Montana Bureau of Business and Economic Research projected slower growth rates of population, per capital income, and total personal income during the 1970's than were experienced during the 1960's (p. 1.20-1.24).

It seems unlikely, then, that more rapid economic growth will offset the retarding impact of higher electric rates. Rates of economic growth may, on the contrary, be slower and the growth of demand for electric energy, therefore, also slower.

4.3.1.4. Prices of Alternative Energy Sources

The prices of both oil and natural gas undoubtedly affect the consumption of electricity. Often the reaction to a change in the comparative prices of energy will be felt only some years later. This is due to the fact that more than just the price of the energy source is involved. The cost of changing heating systems, hot water heaters, and appliances to those using another energy source must also be weighed.

At present the costs of electricity, gas and oil seem to be rising quite rapidly. Oil prices increased drastically during the past winter as a result of price hikes by the major oil exporting nations, but the rate of increase has since evened out again. As a nation we have gone from a long period of restricting imports to protect our domestic oil producers to a current period of facing oil shortages. The present shortages are not caused by a depletion of world supplies, but rather by a thus far successfully run cartel by the exporting nations. The long run outlook for oil prices is uncertain. At times in the past three months there has been an excess supply of oil in world markets at the posted prices. Recurrence of such excesses would probably weaken the solidarity of the cartel. Increased oil production in the United States and the North Sea would have the same effect.

Turning to natural gas, shortages there could also prove to be rather temporary. Although the logic of world reserves of oil and gas being finite is impeccable, it may also be irrelevant over the next 30 years. Some studies indicate that the current shortages , rather than being

due to lack of physical resources in the ground, are the result of either insufficient investment in the discovery of new reserves or the withholding of known reserves in expectation of higher future prices.

MacAvoy and Pindyck (1973), for instance, indicate that the "shortages" could be eliminated by 1979 and a "surplus" brought into existence in 1980 by government policies that allowed the price of natural gas at the wellhead to increase slightly faster (3 cents/Mcf/yr.) than the Federal Power Commission allowed between 1970 and 1973 (2.5 cents/Mcf/yr.). This partial deregulation (deregulating the price paid in contracts purchasing gas reserves, but continued regulation via a slowly rising ceiling on the average wholesale prices charged consumers) would bring forth additional reserves sufficient to satisfy all demand by 1979. It would lead to average wholesale prices of natural gas in 1979 that are 50% above the 1973 prices (MacAvoy and Pindyck 1973, p. 488-489, and Table 4). Natural gas would remain in adequate supply at a competitive price. A similar analysis could be applied to petroleum.

This discussion has tried to show that natural gas and petroleum fuels should remain available and competitive with electricity for some time to come. The retarding influence, therefore, of rising electric prices on the consumption of electricity is not likely to be overridden by switches to electricity forced by increased prices of other currently used energy resources. What does appear as a nearly certain conclusion is that the prices of all energy forms will rise, retarding the growth rate of total energy consumption. This phenomenon will probably overshadow whatever switches may be made between alternative sources (i.e., gas, oil, electricity).

4.3.1.5. Conclusion

During the next 15 years, there will be powerful forces at work retarding the rate of growth of demand for electric energy. The lower rates of increase in demand for electric energy noted over the last five years can be expected to continue or decrease further.

Chapman et al. (1972), in concluding their statistical study of future national demands for electric energy, argued:

> "The estimates...suggest a hierarchy of importance of the four factors (influencing electrical demand). The most important factor seems to be the price of electricity, followed by population growth, income, and gas prices in order of decreasing importance. While modification of these estimates is certain, we believe that future amendments will be of a small magnitude. The estimates indicate that substantial cost increases...and a reduction in population growth will noticeably lower electricity demand growth in the 1980's and 1990's..." (p. 705).

The above discussion of economic and demographic forces indicates that the same conclusions can be drawn for the state of Montana.

4.4 Promotion and Conservation

In Section 4.3. the emphasis was on phenomena that seem to occur independently of the demand for, and supply of, electricity. For example, oil price increases in the last year are heavily the result of decisions made halfway around the world from Montana. The slowdown in national population growth, which now seems to go back to a slowdown in the birth rate starting as early as the late 1950's, depends on a multitude of personal decisions presumably unrelated to the demand for electricity. These and other determinants of electric consumption previously mentioned influence the demand for electricity, but are essentially unaffected by the supply of, and demand for, electricity. The line of influence is essentially running in one direction.

In contrast to these one-directional relationships, both promotional advertising and conservation programs not only influence the demand for electricity, but seem to be themselves influenced by basic demand-supply conditions in the electric power industry. Two directional relationships exist.

4.4.1. Advertising

The electric industry is one of several public utility industries in the United States that, although predominantly privately owned, are publicly regulated monopolies. Regulation is - aimed at protecting the electric customer while at the same time allowing the stockholders of the company a fair rate of return on their investment. Section 6.1.2.1. describes the regulatory procedure more thoroughly. For now only the regulatory treatment of advertising is considered.

In theory two types of advertising are distinguished by the regulatory agencies. The first is advertising that in some way benefits the electric customer. The second is advertising that is clearly aimed at benefiting only the stockholder. For example, a utility may mount a campaign aimed at influencing the regulatory commission to act more leniently toward the company in current rate cases; this clearly is the second type of advertising, and generally the costs of such advertising are not allowed to be passed on to the customer. The first type of advertising, since it is considered to be of benefit to the customer, is allowed as an operating expense to be paid for by the customer.

It is the advertising beneficial to customers that is of interest here, since much of the advertising aimed at expansion of sales to customers has in the past been justified in terms of the potential benefits to customers. There are two basic lines of argument in support of increasing sales being of benefit to the customer. The first stems from cases of excess capacity which are relatively short run situations. The second argument is involved with long run conditions experienced over most of the period from the end of World War II to the late 1960's. These two arguments will be considered in order.

Historically, individual electric utility companies have added blocks of capacity above their immediate system needs. The size of these

additions was justified by projected future load growth. During the period from the installation of the new capacity until that time at which load increased enough to utilize that capacity fully, the company was faced with an excess capacity situation in which additional output could be produced relatively cheaply. Additional sales, under such circumstances, would often lower the average costs of production and in some cases even lead to lower rates to the customer. This was particularly true if the additional demand was made during off peak hours. Under such conditions, effective advertising not only increased the company's sales, but it lead to more efficient utilization of capital equipment and often benefited the customer directly through lower electric rates.

The second argument that advertising actually benefits the customer is substantially an outgrowth of the history of central generating station technology in this country. Through time there has been a relatively even advance in the efficiency of generating units. New units have generally displaced older and less efficient units, with a resulting decrease in average costs of generation. Under such conditions promotion of electrical consumption will allow the installation of new units, and thereby decrease the average generating costs per KW for the whole system. This condition will hold as long as the new capacity is more efficient than the old capacity (i.e., there are technological gains) and the electrical load grows enough to utilize the additional capacity.

Each of these two arguments for advertising depends upon additional output being cheaper per unit of output than the current average cost of output. The first case involves more complete use of excess capacity, and the second involves constantly improved technology allowing average costs to drop as more and more units are added to existing capacity. Although both arguments have been relevant in the past, they do not apply to the present situation.

The first argument applies only after the excess capacity has been built and those resources have been committed. Before the resources have been committed, all costs must be considered, not just operating costs.

The second argument applies only when the average costs of future generation are less than the average costs of present generation. If anything, the reverse of this situation appears to be the current case in both Montana and the Pacific Northwest generally. New thermal generation is costing more than presently installed capacity for a number of reasons: rapid increases in equipment and construction costs in recent years; increasing resistance to plant siting; and more stringent regulation of both stack gas effluent and thermal discharges, with regulatory emphasis on new plants rather than existing plants. Probably of more significance than all of these sources of cost increases is the basic difference in generation mix that is occurring in the Northwest generally and for MPC specifically: low cost hydro generation is being supplemented by higher cost thermal generation. As additional thermal generating capacity is added, low cost hydro will be increasingly diluted, and average costs will increase. To the extent that advertising increases total load and necessitates

thermal capacity additions, it will cause increases, not decreases, in customer rates.

4.4.2. Conservation

Conservation is the opposite of promotional advertising, and it is hard to conceive of a utility company encouraging conservation in the long run. Individual companies in times of capacity shortage have instituted conservation programs, but the long run response is usually to increase capacity rather than retard demand. Companies do not get paid for the energy that is not sold.

If conservation is not in the interest of the producing companies, then long term conservation efforts would probably have to emanate from some public authority.

There are a number of arguments that are traditionally put forward to justify conservation programs. The first generally deals with the concept of finite resources and an assertion that, left only to market forces, present consumption rates are higher than optimum rates of use. Usually the optimum rate of use is left undefined.

The second argument often put forward is that, although the use of electricity is relatively "clean," the production of electrical energy often involves many side effects that are not adequately paid for by the producer (and thus the consumer, who "causes" the activity). These side effects include the use of common property resources, such as water and air, as well as the impact of transmission lines on the landscape, particularly for individual property owners whose private property may be condemned to allow the transmission line to cross. To the extent that these costs are not paid by the customer, he overuses electricity. Conservation programs could then be expected to move consumption closer to the social optimum.

A third justification concerns the increased costs of new generation discussed in Section 4.4.1. If the costs per kwh of new capacity are above the average costs of presently installed capacity, conservation programs will help to hold down the electric rates paid by customers. The Bonneville Power Administration (1973) appears to be seriously considering special treatment of increased consumption which necessitates new - thermal generation, and charging substantially higher rates for that increased consumption.

It appears that conservation programs are a legitimate end to pursue with definite potential long range benefits. The question of how effective voluntary conservation programs are in actually restricting the consumption of electricity still remains to be answered.

Most voluntary conservation programs that have so far been initiated have been in response to a temporary actual shortage or a projected shortage in electric energy. They have often been hastily conceived and have been viewed generally as a temporary "holding action." The potential for ongoing, long run conservation programs is largely untested. Despite the lack of long run test cases and the assertions by many that long

range voluntary conservation programs have - limited possibilities, there have been encouraging results from temporary programs initiated by BPA in 1973. During the period of September to December 1973, BPA estimated that loads were reduced about 7% below projections as a result of their conservation program (Davey 1974). Although the energy deficit was made up in mid-January 1974, energy use was still about 2.9% below projections during the first half of 1974.

4.5. Need: Conclusion

The consumption of electricity cannot be equated with the need for electricity, but the question remains as to how, for the purpose of evaluating proposed Units 3 and 4, the question of need should be treated. Should the projected level of demand for electrical output be considered the same as the level of need for electrical output? If not, by how much do the two differ?

There are no definitive, objective answers to these questions, but there still remain other, albeit less satisfying, approaches. There is probably universal agreement that the amount of electricity consumed is greater than the amount needed. The only area of disagreement is probably over how much greater consumption levels are than need levels. Considered this way, consumption projections can be viewed as the upper estimate of need; need may very well be less, but it can't be more if the projections are accurate.

4.5.1. Projected Consumption Compared to Present and Projected Capability

The evaluation of capability as compared to the projected demand for electricity has not been undertaken for the entire Northwest Power Pool (NWPP) area. The comparison of demand and resources for the four out-of-state applicants has been made in only a general way. Whether or not the projected levels of consumption in the Northwest can be met without Colstrip Units 3 and 4 is not examined closely. However, these units would provide balance to a system that is predominantly made up of hydro generation. The vulnerability of hydro generation in dry years was demonstrated in 1972 and 1973, and the producing agencies and companies in the region are very aware of their vulnerability.

Dealing with the single entity represented by the MPC system simplifies comparison of - electric consumption and capability greatly. This system must be given additional weight, since a Montana generating site must be considered more important to MPC than its partners further west.

4.5.1.1. Montana Power Company Consumption and Capability

Present generating capacity of MPC amounts to 711 MW (name plate rating). Capability (potential output for periods of one hour or less) is listed as 768 MW (Annual Report of MPC 1973). This capacity is composed of 246 MW of steam generation, 2.75 MW of internal combustion, and 520 MW of hydro plant. Table 4-11 includes a more

TABLE 4-11

MONTANA POWER COMPANY GENERATING PLANTS

PLANT (NAME)	KIND OF PLANT STEAM, HYDRO OR INT. COMB.	CAPACITY KW. (NAME PLATE)	CAPABILITY KW.*
Black Eagle	Hydro	16,800	18,000
Cochrane	"	48,000	50,000
Flint Creek	"	1,100	1,100
Hauser Lake	"	17,000	16,500
Holter	"	38,400	49,000
Kerr	"	168,000	180,000
Madison	"	9,000	8,500
Milltown	"	3,040	3,400
Morony	"	45,000	47,000
Mystic Lake	"	10,000	11,500
Rainbow	"	35,600	35,000
Ryan	"	48,000	60,000
Thompson Falls	"	30,000	40,000
Frank Bird	Steam	66,000	66,000
J. E. Corette	"	172,800	180,000
Lake Diesel, Yellowstone Nat'l Park	Internal Comb.	2,750	2,750
	Hydro	469,940	520,000
	Steam	238,800	246,000
TOTAL	Internal Comb.	2,750	2,750
TOTAL ALL PLANTS		711,490	768,750

*That load which can be safely carried for a period of 1 hour without exceeding any of the physical limitations of the equipment such as operating temperature or voltage maintenance.

SOURCE: Annual Report of Montana Power Company to the Montana Department of Public Service Regulation.

complete listing.

During 1973 the average load was 69% of name plate capacity, with the two steam generating plants currently in service, the Corette plant and the Bird plant, operating at a 68% and a 17% load factor, respectively. Average output from the hydro units in 1973 was 77% of name plate capacity.

In July of 1975 and July of 1976, Colstrip Units 1 and 2 respectively, are scheduled to come on-line. MPC owns one-half interest in each of these units, and so will experience an increase of 330 MW of additional capacity by mid-1976. Total capacity will then be 1041 MW.

A comparison of capacity and consumption is made in Table 4-12. Projections of both average sales to ultimate customers and peak demand are brought forward from Table 4-3 and Table 4-4. Peak capability starts with the present 768 MW and adds 165 MW in both 1975 and 1976. These additions represent MPC's share of output from Colstrip Units 1 and 2.

The last column of Table 4-12 shows the average resources owned by MPC under conditions of critical water. Critical water depicts the worst water conditions that can be reasonably expected based on historical hydrologic data. MPC uses the 1928-1932 period for the Columbia Basin and the 1934-38 time span in the Missouri Basin to simulate critical water (Blankmeyer 1974). The monthly critical water potential energy generation figures yield an annual average generation under critical conditions of 337 MW, or approximately 72% of name plate capacity of the hydro generating units. In addition to the hydro figure, the Corette plant is assumed to operate at an 80% load factor (138 MW), and the Bird plant is assumed to operate at a 50% load factor (33 MW). This is at a load factor above recent experience for the Bird plant, but this is probably a conservative estimate of how it would be operated in a critical water year. Units 1 and 2 are assumed to operate at 80% load factor once their initial shakedown period is passed.

The figures in Table 4-12 do not include any purchases or exchange of power, which are an ongoing part of the picture.

MPC does have a number of long term contracts for both purchase and exchange of energy and capacity. Most are relatively small in size, but two are large enough to warrant consideration here. One is with BPA calling for delivery to MPC of 50 MW of peak and 40 MW of energy through August 1987. The second contract is between MPC, BPA and the Washington Public Power Supply System, and will add 80 MW of peak and 68 MW of energy to the MPC system resources starting in 1980 and ending in 1996.

These two contracts are included in the MPC resources shown in Table 4-13. Table 4-13 demonstrates that by 1986, MPC is in a deficit position where, average resources will not cover average projected load. Peak load passes peak resources before then, but might be covered by purchases or trades of power.

Before a conclusion on need can be reached, another few steps must be made.

TABLE 4-12

MPC PROJECTED LOADS AND COMPANY OWNED RESOURCES, 1974-1983

All Figures in Megawatts

Year	Projected Peak Demand	Peak Capacity	Projected Average Load	Resources Under Critical Water Assumptions
1974	880	768	520	508
1975	1011	933	639	640
1976	1043	1098	658	772
1977	1077	1098	678	772
1978	1111	1098	698	772
1979	1147	1098	719	772
1980	1187	1098	741	772
1981	1221	1098	763	772
1982	1260	1098	786	772
1983	1301	1098	810	772

Sources: Load projections are from Tables 4-3 and 4-4

Peak capacity includes ½ of Unit 1 (1975) and ½ of Unit 2 (1976)

TABLE 4-13
MPC PROJECTED LOADS AND RESOURCES, COMPANY OWNED
PLUS TWO EXISTING MAJOR CONTRACTS, 1974-1986
All Figures in Megawatts

Year	Projected Peak Demand	Peak Resources	Projected Average Load	Average Resources Under Critical Water
1974	880	818	520	548
1975	1011	983	639	680
1976	1043	1148	658	812
1977	1077	1148	678	812
1978	1111	1148	698	812
1979	1147	1148	719	812
1980	1187	1228	741	880
1981	1221	1228	763	880
1982	1260	1228	786	880
1983	1301	1228	810	880
1984	1343	1228	835	880
1985	1387	1228	861	880
1986	1433	1228	888	880

Sources: Load projections are from Table 4-3 and 4-4
Resources include 1/2 of Unit 1 (1975) and 1/2 of Unit 2 (1976)plus two existing major purchase contracts. Average resources assume steam generating units at 80% load factor except for the Bird plant, assumed at 50% load factor during a critical water year.

The first necessary step is to equate projected consumption with need. Again, there is no definitive answer, but in fact it need not be answered. Assume for the moment that projected consumption is defined as being equal to need. Table 4-13 does demonstrate the need for additional generating capacity in the mid 1980's, but certainly not 1400 MW of capacity, and certainly there are choices other than 1400 MW-or-nothing available. For example, MPC had suggested that:

> If Unit Nos. 3 and 4 are not built as proposed by the Applicants, the Montana Power Company is considering construction of a third 350 megawatt or larger unit to be constructed at Colstrip in 1979, and additional generation, probably gas turbines of 150 megawatt capacity, would be required somewhere on The Montana Power Company System to meet generation requirements by December, 1978 (MPC 1974, p.2-3).

In addition to this option of generating unit size, there also exist other choices of location. If, for example, Units 3 and 4 were built closer to the Puget Sound Power and Light operating territory, PSP & LC's share of Units 1 and 2 (330 MW) could be traded to MPC for an equal share of the Units 3 and 4 output. The proposed split of output leaves 1,390 MW (Westinghouse 1973) of peak capacity to be exported out of the MPC system at Hot Springs, an amount essentially identical to the output of Units 3 and 4. This, of course, raises the question of need for a Colstrip location: even if the energy is needed elsewhere, is there a need for the generation source to be at Colstrip?

Looking beyond the MPC system to a consideration of the needs and resources of the entire state, the picture is similar. Load growth has been slow, especially in the period since 1968. As can be seen in Table 4-14, the 1969 sales to ultimate customers were more than the sales experienced last year. Sales have remained at essentially the same level since 1969, a phenomenon very dissimilar to the nationwide trend. In-state generation has always been appreciably higher than in-state sales.

Generating capacity sited in Montana amounted to 1,882 MW as of December 31, 1972. The addition of Units 1 and 2 at Colstrip, plus the completion of the first four units at Libby, will increase in-state generating capacity by approximately 1,080 MW, giving Montana 2,962 MW of installed capacity by mid-1976. Four more units are scheduled for installation at Libby by late 1983, adding another 420 MW to generating capacity for the State of Montana. At that time the 840 MW of capacity at Libby would probably be used as peaking capacity.

TABLE 4-14

Average Generation and Sales to Ultimate Customers by Year, 1961-1973
State of Montana

Year	Sales (MW)	Generation (MW)
1973	978	1,042
1972	1,049	1,220
1971	1,052	1,216
1970	1,038	1,145
1969	1,045	1,192
1968	884	1,084
1967	784	1,041
1966	808	983
1965	711	1,014
1964	645	840
1963	593	753
1962	576	805
1961	545	774

Installed capacity in the State of Montana as of 12-31-72 + 1,882 MW

Sources: Computed from Edison Electric Institute, Statistical Year Book of the Electric Utility Industry for 1971 and 1972; Edison Electric Institute, Histroical Statistics of the Electric Utility Industry Through 1970; Personal Communication, Dave Bailey, Statistics Section, Edison Electric Institute, 1974

The above analysis of need is preliminary. Further studies are under way which will be published in the final EIS.

CHAPTER FIVE Alternative Electricity Sources

5.1. Criteria for Electrical Energy Source Selection

The following set of criteria has been generated for consideration in selecting an electrical energy source:

1. Site requirements and availability
2. Time schedules and constraints
3. Available technology
4. Construction and operation costs
5. Environmental impact, to include economic, social, engineering and natural environmental factors.

Distribution of future electric growth between the various electrical energy sources (i.e., coal-fired, nuclear, hydro) is a complex national and regional issue which requires in-depth study at the federal level. Therefore, the Energy Planning Division will not justify the applicants' preference for coal-fired power plants over nuclear and hydro plants.

5.2. Available Existing Electricity Sources

Available existing electricity sources are not as numerous for large-scale commercial-size generating plants as might be suspected. Each alternative is discussed below with respect to the set of criteria established previously.

5.2.1. Nuclear Fission Power Plants

The site requirements for a nuclear power plant of the 1400 MW size (the amount of power proposed at Colstrip) could vary from approximately 300 acres to 900 acres. The actual space needed for storage and for plant facilities is not great, but an extensive area is necessary to provide the "exclusion area" required by law. Also, the geology of the nuclear site is extremely important. The foundations for the massive turbine, generators, and containment vessel must be located over very firm bedrock. Another feature desirable for a potential nuclear power plant site is the availability of navigable water. The size and mass of the containment vessel make delivery in one piece a serious problem if navigable water is not available.

The standard time required for planning and construction of a nuclear power plant is currently about 8 to 10 years. Many schedules have been delayed for additional years due to problems in obtaining the necessary licenses. These delays lead to escalated construction costs and prolonged schedules. Recently, a federal effort has been launched to shorten the time period by standardizing planning and construction procedures.

The technology and state of the art are advanced enough at this point to provide reliable nuclear fission power plants of the 1400 MW range. However, more than one unit may be required for a plant of this size.

From an economic point of view, the construction costs for nuclear fission are approximately $500/KW installed (Olds 1974). The

operating costs are about 1.0 mills per KW hr and the fuel costs are about 1.0 to 3.0 mills per KW hr (Commonwealth Edison 1973).

Because of certain design criteria, most current nuclear power plants produce steam at temperatures of 500°to 600° F and at pressures of 800 to 1000 pounds per square inch. Therefore, their thermal efficiency is only approximately 32%. However, once the AEC licensing and rating restrictions are removed, nuclear units tend to realize substantially higher plant load factors than do similar sized coal-fired plants. Historically these load factors may be in the 80 to 90% range.

The social impacts of a nuclear power plant are similar to the impacts of a fossil plant. The construction crews, in both cases consisting of 1500 to 2000 men, and their familes impact the social structure of local communities during the four to six year construction period. From an engineering and natural sciences point of view, the impacts of nuclear fission plants differ from fossil plants. The heat rejection of nuclear fission power plants is approximately 50% more than fossil plants; therefore, the nuclear plants require significantly more cooling water. The possibility of radioactivity from nuclear plants contaminating the atmosphere and surrounding areas has resulted in strict controls set up by the AEC. However, with all of the potential for nuclear accidents to occur, and some have occurred, there has not been a single fatal accident as a result of nuclear power plant operations to date.

5.2.2. Hydroelectric Power Plants

The site requirements for very large hydroelectric power plants are, of course, large rivers where, depending on the type of plant, large reservoirs may be formed by the construction of dams. There are sites in the Northwest which could support 1400 MW of hydroelectric power (BPA 1974). The acreage needed for a hydroelectric plant varies greatly depending on size, location and type of plant.

The time constraints on hydroelectric plant construction seem to be on the order of four to six years depending on the availability of sites. No particular problems seem to be experienced with the construction schedules such as are experienced with nuclear plants.

The technology and state of the art are well defined for hydroelectric power plants and associated dams. Since this is one of the oldest sources of power, no prohibitively large technology problems should exist.

The construction costs for hydroelectric power can vary widely, depending on the type of plant being built. If no dam is required, construction costs could be in the $200/KW installed range. However, if large dams and reservoirs are required, the construction costs could reach the $1,000/KW range. Operating costs are small and fuel costs are non-existent.

The turbine efficiency for most hydroelectric units is around 92% to 94% at full load.

However, the plant factors for hydro units are usually low. This is based on the finite amount of water which can be stored and the limited length of time that hydro plants are run at full load.

The social impacts of hydroelectric power plants are, again, strongly felt in the construction stages. The large construction crews and their families impact local communities for periods of three to four years. Another major environmental impact of hydroelectric plants is on the river involved. Although there is generally no pollution, the river(s) upstream from the dam is destroyed for miles in some cases and turned into lakes or reservoirs.

5.2.3. Coal-Fired Power Plants

The site requirements for a coal-fired power plant of 1400 MW could vary from approximately 700 acres to as much as 1200 acres, due in part to the large areas necessary for storing fuel and disposing of waste materials. As with nuclear plants, coal-fired plants consist of massive structures and components which require very firm bedrock for construction. It is also desirable to have railroad facilities nearby and good road systems. There are many sites in Montana and the Northwest which would be practical sites for coal-fired power plants. The availability of coal in a given area or ability to transport coal to the site are essential criteria for locating a coal-fired plant.

The time schedules and constraints of planning for coal-fired plants seem to be increasing due to lack of supply of components and materials. However, on the average a six year lead time appears to be appropriate, with three to four years of actual construction time included. The major delays affecting coal-fired power plants are associated with delivery schedules and adverse seasonal and climate restrictions.

The technology is certainly available to provide dependable service of 1400 MW coal-fired plants. Coal-fired plants of this size have been providing reliable power for many years. There is, however, some doubt as to the technology and state of the art for certain emission-control technology associated with large coal-fired plants. High efficiency sulfur removal equipment has yet to be proven and trace element emission control equipment for large coal-fired power plants is non-existent. However, a solvent-refining technique is in the development stage which will significantly clean coal. Pulverized raw coal is mixed with an aromatic solvent and reacted with hydrogen gas at high temperatures and pressures. This dissolves the coal and separates it from its ash, sulfur, oxygen and water. The solvent is then removed, leaving a pitch-like product low in sulfur and ash and with a heat content improved by as much as 60%. This process will probably add significantly to the final cost of the cleaned coal. As a final note on technology and state of the art, the turbine-generator sets seem to have reached an optimum size of 1200 MW per unit. Coal-fired steam supply systems can be designed for larger units, but it appears that at least in the near future the 1200 MW unit is the largest that will be built.

For coal-fired power plants, construction costs have been undergoing strong escalation recently and appear to be about $250/KW to $400/KW installed when all the control features are considered. The operating costs are approximately 2 mills per KW hr and fuel costs about 3 to 5 mills per KW hr. Using steam temperatures of 1000° to 1100° F and pressures of 1800 to 3500 pounds per square inch, current fossil-fueled plants can attain overall thermal efficiencies of 37% to 38%. However, less than one half of the existing plants attain this efficiency, leaving an average of about 33% efficiency for existing plants.

Another point to consider is that plant factors for new large, base load coal-fired plants are by design, around 80% for the first 5 to 10 years of life. Thereafter the plant factors tend to decrease until the plant is primarily used for peaking.

The environmental impact associated with a 1400 MW coal-fired power plant must be studied in great detail, and depending on design, could be of various magnitudes. Again, the social impact on local communities may be very significant due to the large construction crews of 1000 to 2000 men and their families. The construction period may last from three to four years for large coal-fired plants. The other areas of potentially heavy impact are associated with heat rejection and air pollution. The proposed 1400 MW coal-fired plant requires approximately 37 cubic feet per second (cfs) of water to reject waste heat by evaporative cooling towers. The threat of possible air pollution due to the burning of thousands of tons of coal per day also poses a very real potential impact on human, animal, and plant life. Intensive studies are, and must continue to be, conducted to assure that air pollution impact will be properly controlled.

5.2.4. Gas/Oil Turbine Units

This type of unit requires special discussion due to its unique character. The site requirements are minimal, in most cases, 20 to 50 acres or less, unless many units are grouped together. The units are usually package units so that very large single units are not readily available. These units are used primarily for peaking power and are generally 50 MW or less in capacity. They are fairly expensive to install and also quite expensive to operate. The fuel rates have increased tremendously due to the oil shortage. Maintenance also can be a problem due to the electric remote control systems involved. This type of unit has little impact on the environment due to the small area required, the small construction crews and time schedules necessary to install, and the clean-burning fuels which are consumed. These units are not practical, however, as large (i.e. 1400 MW) central stations, due to unit size and limitations and operating costs.

5.2.5. Geothermal Power Plants

The availability of adequate sites is perhaps the single most restrictive factor to geothermal development. There are two types of

geothermal sites which may be developed. The first and most common is the wet site, several of which have already been developed in the United States and abroad. At the wet geothermal site the steam is already generated by a source of water which comes into contact with hot rock. This natural steam is then expanded through a turbine to produce electricity. Based on California geothermal experience, an estimate can be made that in general, one square mile of land is required to produce enough steam for a 100 MW unit for 30 years, i.e., to produce 1400 MW for a period of thirty years, 14 square miles of land area are required. In Montana there is one geothermal source known to exist at Marysville. This source is thought to be dry, hot rock with no natural source of water and steam -- and is representative of the second type of site mentioned above. Exploratory drilling is currently underway to determine exactly what is there. If this site is dry, it will require much research and many more years before a commercial generating station could be built. If it is a wet source, the time requirements and research would be shortened considerably. However, at this time there are too many unknowns to make geothermal generation a viable alternative to the proposed Colstrip generators.

5.2.6. Nuclear Breeder Reactors

The technology and state of the art needed to make nuclear breeder reactors viable sources of power are not available at this time. The following discussion is taken from the August 1, 1974 edition of the Washington Comment article, "A Different Breeder".

The liquid metal fast breeder reactor (LMFBR), program is running into more headaches. Recent Atomic Energy Comission estimates had put the cost of building a demonstration plant at $700-million, but AEC sources now say that figure is too small. Some observers estimate the final bill will come in at $2-billion.

The continuing problems of the LMFBR give a rosier hue to one of the so called "back-up" breeders--Admiral Hyman G. Rickover's light-water cooled breeder (LWBR). Not only is the LWBR relatively free of controversy, it is only a year away from beginning full-core demonstration operation at the Shippingport (Pennsylvania) reactor owned by AEC.

The LWBR cannot produce as many fissionable atoms as the liquid metal breeder. The ratio is roughly one atom produced for each atom burned in Rickover's plant, against 1.35 new atoms in the liquid metal version. But the LWBR is far cheaper, and utilities will not have to pay any developmental costs. Utilities are expected to contribute $250-million to the LMFBR program, compared to a total LWBR demonstration plant cost of $200-million.

Rickover's breeder also avoids the major environmental battle now facing the liquid metal breeder. The LMFBR produces plutonium, which represents both waste disposal and safeguard problems, while the fuel cycle in the LWBR is uranium-thorium. Rickover will simply replace the current Shippingport core with a seed of fissionable U-233 and a

blanket of fertile thorium. When irradiated by neutrons from fissioning U-233, the thorium turns into more U-233.

The fact that Rickover is so close to operating his breeder means utilities might be able to turn to it in the 1980's. Existing reactors can probably be retrofitted into LWBRs for the cost of refueling, says a member of Rickover's staff. But skeptics would like more cost projections than Rickover is making.

The Washington Comment article provides further information, but the point to be made is that nuclear breeders are not technologically available as viable alternatives for power sources at this time.

5.2.7. Solar Power

Current research on solar power is focusing on two general methods, thermal conversion systems and direct conversion systems.

The thermal conversion systems would involve using the sun's rays to heat a gas which in turn would heat a large quantity of molten salts. The molten salts would then be used to produce steam and the steam could drive a conventional turbine-generator set to produce power. The main problems with this system are that it requires about eight to ten square miles of collection surface to supply energy to a 1000 MW power plant, and that some type of energy storage is necessary for nights and cloudy days. Unfortunately, technology has not yet produced practical energy storage systems. Presently available batteries are impractical because of their high cost and low efficiency.

The direct conversion system would convert solar radiant energy directly into electricity. This would involve launching a satellite-mounted array of solar cells in synchronous orbit which would permanently locate the cells over a specific pre-selected area of the earth's surface. The radiant energy could be converted electronically to microwave energy and then be beamed down to collectors on the surface of the earth. However, the problems with this system are many at this time. The energy when collected is D.C. (direct current) and would have to be converted to A.C. (alternating current), which is possible, but expensive. The solar collecting panel would have to be 25 square miles while the receiving antenna on earth would have to be 36 square miles in size (Pa. Dept. of Ed. 1973). The initial cost of such a station would be much higher than that of present stations, but the operating expenses would be low.

At this time, solar power is not technically available for commercial use. However, as this source becomes less expensive and more efficient it should receive increased private use for individual heating and cooling of homes.

5.2.8. Wind Power

It is envisioned that large wind-driven generators will be located out in the oceans or

the Great Lakes where they can catch prevailing winds. However, because the wind is so variable, successful wind power generation, like solar power is dependent upon energy storage since the energy must be captured as it becomes available. At best, wind power could supply only a small portion of our national energy needs.

5.2.9. Tidal Power

Tidal power utilizes the energy of the flowing tides which reverse direction four times a day. Tidal power plants can be located only in a few favorable places where a large tidal flow and head exist in a bay or estuary which can be dammed. The basin is allowed to alternatively fill and empty, the water being routed through reversible hydraulic turbines. Total exploitable tidal energy resources could provide less than one percent of the projected United States electrical consumption by the year 2000.

5.2.10. Magnetohydrodynamics (MHD)

In magnetohydrodynamics (MHD) a hot, flowing, ionized gas is substituted for the rotating copper coils of the conventional electrical generators. Gases from the high temperature combustion of fossil fuels (coal, gas, oil) are made electrically conductive by "seeding" with the suitable chemicals. This conducting gas then travels at high speed through a magnetic field to produce a flow of direct current. The hot gases can then be used to fire a steam turbine generators making the overall efficiency of the composite system as high as 60%, one and one-half times that of a modern fossil fuel plant. Laboratory-scale MHD generators are in operation at the present time. However, it is unlikely that large-scale electrical production from this source will be practical before the end of the century. Although substantial problems remain to be solved in materials engineering, reliability, long-term durability and emission controls, MHD is one of the more promising new concepts of electrical energy currently under study.

5.2.11. Fusion Power

The most promising long-range resolution to the problem of decreasing fuel supply is the process of fusion, in which two light nuclei are fused together to form a heavier nucleus, thus releasing nuclear energy. The fusion reaction will use the heavy isotopes of hydrogen called deuterium and tritium. Deuterium can be economically separated from sea water, and tritium can be obtained in a nuclear reaction involving lithium. The fusion process is expected to result in smaller quantities of radioactive waste than the current fission reactors.

To make controlled fusion work, one must heat an electrified gas called a plasma to temperatures on the order of 100 to 300 million degrees centigrade, hotter than the interior of the sun. This gas must then be contained in some way so that it does not touch the walls of the containment vessel, and held in this condition for a fraction of a second until a fusion reaction takes place. No one has yet made controlled fusion produce more energy than it con-

sumes.

In the past, fusion research efforts have been directed to the goal of igniting and containing fusion reactions within magnetic fields. Many scientists now think that a more feasible approach is the use of high-powered lasers to initiate and confine such reactions. This newer concept is to heat small pellets of deuterium and tritium in pulses with many high-powered laser beams coming from different directions, instantaneously heating the pellets to ignite fusion, and at the same time containing the pellets in converging beams long enough to obtain useful output of power.

Lasers big enough to test the feasibility of this concept are just becoming available. The technical problems that still need to be overcome to be able to build practicable power systems based on either fusion concept are immense, probably putting the time of the first fusion power plants into the next century.

CHAPTER SIX Alternative Coal-Fired Plant Sites

The selection of an optimal site for a coal fired power plant is based on a number of criteria. These are the cost to the utility, social and economic costs to local communities, environmental costs, and engineering factors. An optimal site exists for each of these criteria, but usually no single site can equally satisfy all of them. Therefore, trade-offs between the criteria must be made in deciding upon a location.

In the case of the Colstrip project a regional option exists for relocating the proposed facilities in terms of all of the above criteria. However, the particular emphasis in this chapter is the cost to the utility companies and the cost to their customers. This emphasis will be limited to a consideration of the comparative dollar costs of mine site generation, in which the electric energy is transmitted via EHV transmission lines to the load center, versus load generation, in which the coal itself is transported to the load center and used there to fuel the generating units. In the case compared below, the applicants' proposal for building Units 3 and 4 in Colstrip, Montana and shipping the power west by means of two parallel 500 KV lines (mine site generation) is weighed against the alternative of not building the units in Colstrip, and instead shipping the equivalent amount of coal westward to units built closer to the load centers (load center generation). Narrowly defined, the question is simply which alternative costs less.

6.1. Comparisons of Alternative Costs: Coal Shipment Versus Electric Power Transmission

Although the question appears to be a simple one, it involves other questions: How do you compare costs of alternatives if the timing of expenditures is different? From whose point of view should the costs be compared? Is it cost to the company or cost to the customer that counts? These questions present themselves in any serious cost comparison, and although not all of them will be answered, an attempt will be made to consider the most important question areas.

6.1.1. Cost Comparison Background

> Of the forms of energy listed,...electricity generally is the form most expensive to transport. The popular notion that all it takes is a few wires and no moving parts grossly oversimplifies the electric transmission problem. The average person never sees the capital charge and line losses, which nevertheless are quite real. Because of this line loss and the increased transmission costs, it is usually cheaper per kilowatt-hour delivered to point of use to build the generating plant close to the load center rather than at the mouth of the coal mine. (FPC 1966, p.233)

Statements similar to this have appeared in numerous publications; in general, the conclusion has been that it is cheaper to ship coal than to

transmit electricity. Although the details of cost comparison are usually missing, a survey of the literature leaves little question that coal can be transported more cheaply than electric energy can be transmitted. The statement that a generating station should be close to fuel, close to water and close to the load center is often followed by an aside that if one of the three criteria has to be violated, the fuel can be shipped.

6.1.2. Costs of Service to the Consumer

Costs of alternative energy transport schemes can be compared from the standpoint of cost to the operating company or from the standpoint of ultimate cost to the electric consumer. There are, of course, additional perspectives that might be evaluated, such as costs to Montanans or cost to the environment. This section defers those considerations and deals only with a comparison of the costs to the consumer of electricity.

6.1.2.1. Introduction

Both common sense and economic theory indicate that, generally speaking, increased costs of production are, at least in part, passed on to the consumer. This is particularly true in competitive industries; costs the consumer pays are representative of the costs of production. In such a situation costs to the consumer and costs to the producer will parallel each other, and there would be little point in differentiating between the two. This parallel does not necessarily exist when one looks at the regulated public utilities. This is partially a result of the lack of competitive constraints, but more importantly it is caused by the regulatory mechanism itself.

In the United States, public utility monopolies are regulated at both the state and the federal level, with the responsibility for intrastate regulations falling to the state regulatory commission. By law, utilities are constrained to charge customers rates that will earn the utility no more than a "fair" rate of return on investment. This leaves two areas of ambiguity for the state regulatory commission to grapple with: 1) what is the "fair" rate of return and 2) what is allowed in the "investment" on which the rate of return is calculated?

Generally, the rate of return is supposed to approximate the rate of return earned on other investments of similar risk. The "investment" is commonly called the rate base (the base to which the fair rate of return is applied). Expense items such as fuel and labor (items that are "used up" in the same year that they are purchased) are not allowed in the rate base, but are passed on directly to the customer without the utility earning a return on them. Capital items such as generators, transformers, and transmission lines (items that last beyond the year in which they are purchased) are allowed into the rate base and their cost plus a fair rate of return on that cost is charged to the customer over the life of the capital item.

From this it follows that two alternative expenditures of funds might have quite different impacts on the allowed revenues of the utility depending on whether the expenditure was allowed into the rate base or not. The case in question, building and operating transmission lines versus shipping the coal, involves different avenues of regulatory accounting. If the transmission lines are built, the total cost of the construction of those lines plus an allowance for interest during construction (an allowance to cover capital investment made, but not yet entered into the rate base) will become a part of the total rate base upon the completion and energization of those lines. Thus over the life of the line, the customers will pay an amount equal to the annual depreciation charges to the line and other associated expenses plus a rate of return on the investment. If, in contrast to this capital expenditure, the coal is shipped, the cost of shipping will be treated as an expense item not allowable into the rate base and no rate of return will be allowed on it. The expense will merely be passed on to the customer. For equal annual expenditure by the utility, the customer will normally pay more for the transmission line alternative than he will if the coal is shipped. This is generally true when comparing any expense item to a capital item.

6.1.2.2. Cost Comparisons

The following cost-estimating procedures are applied to a hypothetical case in which coal is shipped from Colstrip to Hot Springs in lieu of building transmission lines from Colstrip to Hot Springs. This should not be taken as a proposal that Units 3 and 4 be built at Hot Springs; it is rather a small part of the overall comparison of load center versus mine mouth generation, assuming the actual load center is west of Hot Springs. The Colstrip to Hot Springs segment is the only portion of the area under consideration which would be totally in the hands of private companies, and for which considerations of load displacement play no significant part. From Hot Springs west, the Bonneville Power Administration (BPA) Grid would be utilized, and the combination of private and public ownership would be difficult to untangle in terms of costs to the consumer. The Spokane, Washington, area is considered as a comparison point in Section 6.1.3., but the methodology of that comparison is different.

The calculation of the cost of electric transmission involves identifying and estimating the magnitude of all factors which will influence the cost of electricity to the consumer. Thus any charges which are allowable operating expenses for public utilities must be included, as well as a reasonable rate of return for the capital costs of the project. In addition, a cost is incurred when electricity is generated and then lost via transmission because of the resistance of the line; the opportunity cost of these line losses—their value in an alternative use——is also incorporated into the total cost of transmission. At the core of the estimate is the installed cost of the line; the relative size of that expenditure is dominant.

Three estimates were made of the cost of transmission of electricity from Colstrip to Hot

Springs, Montana. Basic assumptions common to the estimates were that 1390 MW of peak power would be available at Hot Springs with an associated line loss of 64 MW of peak power (Davenport 1974). Load factors used are shown in Table 6-1, showing that as the Colstrip generating facilities age and are replaced by more modern equipment, their average load falls. This is consistent with cost procedures established by the Federal Power Commission:

> A basic premise used in the estimates was that over the estimated service life of 30 years the high-pressure, high-temperature plants would be operated over a range of annual plant factors, relatively high during the first half of the service life and gradually diminishing to a minimum with a lifetime average of 55 to 60%. (FPC 1968, p. 88)

The load factors used in Table 6-1 yield a higher average load factor, 65%. The line and associated substations were assumed to have a useful life of 37 years. Both the higher load factor and the longer life used here result in lower costs of transmission. Because load factors vary over the age of the project, the cost of transmission in mills/kwh will also vary.

A number of estimates were made of construction costs of 500 KV lines. Using The 1964 National Power Survey and other Federal Power Commission publications, consistent estimated installed costs for 500 KV lines can be made. These figures also compare closely to BPA actual cost experience, except that the BPA recent experience shows a much faster inflation of costs than does the Handy-Whitman Index (Whitman, Requardt and Assoc. 1974). All of the FPC and BPA data are closely comparable; their differences are largely explained by differences in overhead cost loadings or variation in inflation indices. As compared to this group of estimates, the costs estimated in the Westinghouse (1973) analysis are extremely low and have been rejected as unrealistic.

Three estimates of installation costs are used here. The first uses information adapted from FPC (1969) published material. The second estimate is based on adjusted BPA data. The final estimate is an attempt to reflect possible differences in land and labor costs in Montana together with a high ratio of guyed tower structures (BPA uses more self-supported towers).

Table 6-2 is the basis for the first cost estimate.

TABLE 6-1

LOAD FACTORS USED IN COST OF TRANSMISSION ESTIMATES

Age of Transmission Line	Peak Load	Load Factor	Average Load	Average Line Loss
1 - 9 years	1390 MW	80%	1112.0 MW	51.2 MW
10 - 16 years	1390 MW	75%	1042.5 MW	48 MW
17 - 23 years	1390 MW	65%	903.5 MW	41.6 MW
24 - 30 years	1390 MW	55%	764.5 MW	35.2 MW
31 - 37 years	1390 MW	45%	625.5 MW	28.5 MW

TABLE 6-2

ESTIMATED INVESTMENT COSTS OF TRANSMISSION LINES

January 1, 1969
Line Voltage: 500 KV Single Circuit
(Exclusive of Right-of-way and Clearing)

Cost Per Mile of Line
Including Materials and Construction

Conductor Size	Poles, Towers and Fixtures	Conductors and Devices	Total Cost Including 15% General Overhead
2-2493 ACSR	$58,520	$47,300	$121,696
2-2049 ACSR	38,500	44,730	95,715
3-954 ACSR	38,500	35,175	84,726

Source: FPC 1968, as revised by FPC 1969.

For the proposed Colstrip to Hot Springs line, four conductor bundles are being used, with the proposed conductor being similar to the 954 ACSR conductor shown above. To adjust for the use of four conductors instead of three as shown in Table 6-2, two changes must be made: first, a stronger tower will be necessary, and second, costs of conductors and devices are increased to adjust for these differences: the higher tower cost is used ($58,520) and the conductor and devices cost ($35,175) is multiplied by 1-1/3. This yields a base figure of $105,420 per mile. Adding another 15% for general overhead gives an estimated total cost, exclusive of right-of-way and clearing, of $121,233 per mile in 1969 dollars. Using an inflation factor (Whitman, Requardt and Associates 1974) of 1.45, the costs in 1974 dollars is $175,788. Right-of-way costs and clearing costs were combined and estimated to total $750 per acre. Assuming a 300-foot right-of-way, acreage per mile of line is 36.36 and costs would be $27,272 per mile. The BPA estimate is $33,000 per mile for a single line (See Table 6-3). This figure is for two lines, whereas equipment and construction costs have been estimated for single line construction. After doubling construction costs, total costs per mile including land and clearing is $378,848 per mile of double 500 KV line. This figure is the basis for estimate #1.

The second estimate of installed costs for 500 KV transmission lines is based on recent construction experience of BPA. Construction cost estimates as of January 1974 are shown below.

TABLE 6-3

COST OF CONSTRUCTION, SINGLE-CIRCUIT 500 KV LINE, PER MILE
50% Mountainous-50% Rolling
January 1974

Survey	$ 6,500
Design	2,100
Material	116,250
Land	19,500
Clearing	13,500
Construction	59,510
Material Handling	9,620
Subtotal	226,980
Administrative Overhead (17.5%)	39,520
Total	$266,500

Source: Wilkerson 1974

Three factors must be adjusted before these figures can be used. First, these figures are for rougher terrain; second, building two parallel lines should not cost as much as two single lines; third, these figures are accurate as of January 1, 1974, and costs are now appreciably higher (BPA figures indicate a 28% increase from mid 1972 to January 1974 , with most of the increase occurring in the last twelve months).

The adjustment for two lines rather than a single line was made by doubling costs for material, construction, and material handling. This yields a new total cost (after applying administrative overhead) of $484,523 per double line mile. This figure was then inflated by 10% to update costs to mid-1974. The result is $532,975. The adjustment for terrain differences was to arbitrarily subtract $32,975, yielding a final estimate of $500,000 per mile. This rough estimate closely matches actual construction costs experienced by BPA in 1974 over terrain similar to that which would be crossed by a Colstrip to Hot Springs transmission line. This figure was used in estimate #2.

The third estimate is an attempt to adjust BPA figures for differences in tower design, and possible lower costs of labor and land in the state of Montana. The estimate is detailed in Table 6-4.

TABLE 6-4

Costs of Construction, Single Circuit 500 KV Line, Per Mile. Adjusted for Montana Wage Rate and Land Costs.

Survey	$ 3,500
Design	2,800
Material	74,300
Land	3,900
Clearing	10,000
Labor and Material Handling	58,800
Subtotal	153,300
Overhead and Supervision	22,600
Total	$175,900

Based on this breakdown by item, per mile costs for estimate three are set at $350,000 for double 500 KV lines.

In addition to the costs of constructing the lines from Colstrip to Hot Springs, there would also be a heavy capital expenditure in substations. According to the Westinghouse (1973) analysis, substation investment associated with the lines would amount to $35,073,000. This figure is at least two years out of date now, and is definitely understated. However it is used for all estimates in the analysis.

The total capital expenditures associated with the Colstrip to Hot Springs line estimated

in the three different ways described are shown below in Table 6-5. A distance of 426 miles is used to estimate transmission line costs.

TABLE 6-5

Alternative Estimates of Costs of Double 500 KV Lines and Associated Equipment: Colstrip to Hot Springs, Mid-1974 dollars

	Transmission Lines	Substations	Total Cost
Est. 1	$161,389,248	$35,073,000	$196,462,248
Est. 2	$213,000,000	$35,073,000	$248,073,000
Est. 3	$149,100,000	$35,073,000	$184,173,000

The cost of transmission lines for estimate two is nearly 1/3 higher than estimate one. As has been mentioned previously, these two sources agree closely when differences in inflation factors are considered. Whereas the Handy-Whitman Index for all transmission lines shows an inflation factor of 1.45 from 1969 to 1974, BPA experience for 500 KV lines only over the same time span shows an escalation factor of 1.945. Adjusting for this difference, the two estimates are within 2% of each other.

Estimate three is 70% of estimate two, with most of the difference in labor, land and material costs. Compared to most other cost sources, estimate three is low. For example, Bureau of Reclamation figures (Krueger 1974) on field costs per mile for 500 KV lines built with three 954 ACSR conductors per phase were $136,600. These costs do not include costs of land and rights, clearing, access roads, construction engineering, design, construction supervision or other general expenses. In addition, they are for three conductors per phase, rather than four as proposed by the applicants.

Before discussing the calculation of customer costs, one further adjustment to the estimated capital costs must be made. Although interest payments made by the utility to bond holders are not allowable expenses for rate-making purposes, there is an allowance for interest accrued during construction of faciltiies. Investments in plants are not allowed into the rate base until that equipment is placed in service, which may be many years after construction was initiated, and over the interim, interest charges accumulate. These charges are allowed to be added into the original costs of the plant. Assuming an 8% annual allowance for interest during construction, and a three-year construction time, 12% (funds tied up for an average of $1\frac{1}{2}$ years before the plant is in service) should be added to estimates one and two in Table 6-5 to approximate the addition to rate base. This means estimate one would be reflected as an increase to the rate base of $220,037,718; estimate two would increase the rate base by $277,841,760; and estimate three would increase the rate base by $206,273,760.

Using the construction costs described, the details of the cost calculations are explained below:

1) Rate Base. The installed cost of the transmission lines and substations plus the al-

lowance for interest during construction enter the rate base in the same year the facility is energized. This amount is called the original cost (O.C.) of the facility. The effect of the installation on the rate base is reduced in successive years by the amount of annual depreciation expense, so that at the end of the 37-year period, original cost less accumulated depreciation is zero.

2) Return to Investment. Capital investment is undertaken in order to earn a profit for the owners; in a regulated industry such as a public utility, profit rates reflect the opportunity cost of alternative investments. Generally, because public utility investments are relatively risk-free, profit rates are not as high as in non-regulated industries. The profit rate is tied, however, to the potential return on other types of relatively riskless investments such as high-grade bonds. Thus as interest rates on bonds rise, public utilities must expect higher rates of return on their capital in order to attract and hold potential investors. Two rates of return estimates are used here. The low estimate uses a rate of return on invested capital of 8%, which reflects the historical rate of return of public utilities in the United States. For the year 1971, the Federal Power Commission calculated that the rate of return on the electric utility rate base was 7.4% for all privately owned utilities (FPC 1971a). Since that time, interest rates have risen, so that high-grade utility bonds yielded a return of 8-9½% in 1974 and U.S. Treasury bonds were yielding 9%. Thus an opportunity cost of 8% was selected to represent a conservative estimate of a fair return to the capital invested in the transmission line. A less conservative, but still reasonable, estimate of 10% return to capital was used in the high estimates of transmission costs. The 10% figure is based on recent inflation and "tight money" in financial markets. If inflation becomes embedded in the economy, then investors must earn a higher interest rate to offset the loss in value of money they lend, in order to maintain the same real rate of return. The 10% figure was chosen to represent some of the costs of inflation; it is not an extreme figure, especially in light of recent pressure from Washington, D.C. to encourage state commissions to allow higher rates of return.

The investment in the transmission lines and substations will not be entirely financed by the owners of the utilities; part will be financed by borrowing. Interest charges on borrowed capital are not an allowable operating expense for regulated utilities in the calculation of the rate base. Thus all interest must be paid out of the "fair return" allowed on the rate base. This adds support to the argument that an 8-10% return on the entire project is not excessive, since this return must include the interest charges as well as the real return to the stockholders.

The rate of return was applied to original cost less depreciation for each year. Although Montana is a "fair value" state which allows the capital to be evaluated at its replacement cost, not all the utilities in the Colstrip Project Management use this method. By using original cost rather than replacement cost, all of the cost of transmission estimates are conservatively low for all but the first few years of the equipment's lifetime, when compared to the return

to capital allowed by "fair value" accounting practices.

3) Operation and Maintenance of the Transmission Line. Annual Operation and Maintenance expenses were estimated at 1% of investment cost (FPC 1964).

4) Property Taxes. Property taxes will be paid on the value of the transmission line and substations. The estimated property taxes paid are based on the average State of Montana mill levy.

Although the exact state property tax bill will depend on the eventual ownership of the transmission line (as yet undetermined) a good estimate of the property taxes is obtained by the following calculation (Hutchinson 1974) applied to original cost:

x .40	Equalization Factor
=Equalized Assessed Value	
x .40	Classification of Property (Class 9 Utility Property)
=Taxable Value	
x .21	Average 1974 Mill Levy
=Property Tax Liability	

This method was used to obtain the estimates of property taxes paid on the transmission line facilities.

Under the present property tax system in Montana, an electric utility is assessed as a single total unit. The contribution of any specific piece of investment to the total assessment is impossible to determine exactly. Tables 6-6 through 6-11 use original cost for the base figure.

5) Federal Corporate Income Taxes. Federal income taxes, like property taxes, are considered an allowable operating expense when calculating a utility's revenue requirements. In other words, they are passed on to the consumer, and any taxes accrued as part of the transmission project would be considered part of the cost of transmission.

Calculation of a public utility's federal income tax is an awesome task. It is especially difficult to decide what portion of the utility's tax expense was incurred as part of a particular project such as a transmission line investment. Several guidelines to this calculation do, however, exist. First, on the average, investor-owned public utilities pay 6.1% of their operating revenues in federal income taxes (Edison Electric Institute 1972). On this basis, the portion of the Colstrip power delivered to Hot Springs should generate federal tax revenues as shown in Table 6-6, based on varying load factors. These tax estimates are in 1974 prices, based on average revenue/kwh of $1.45.

TABLE 6-6

ESTIMATED FEDERAL CORPORATE TAXES
ON ENTIRE COLSTRIP PROJECT

Load Factor	Kwh/Year	Total Revenue	At $6\frac{1}{2}\%$ of Total Revenue Average Federal Income Tax
80%	9.741×10^9	$141,200,000	$9,178,000
75%	9.132×10^9	132,418,000	8,607,200
65%	7.915×10^9	114,763,000	7,459,600
55%	6.697×10^9	97,107,000	6,312,000
45%	5.479×10^9	79,451,000	5,164,300

The taxes shown in Table 6-6 are not all incurred as part of the transmission phase of the project, and it would be incorrect to "charge" the entire amount to the cost of transmission. In order to divide the tax burden between the generation and the transmission phase of the project, it is useful to consider the nature of the federal corporate income tax. The corporate income tax is intended as a tax on profits, nominally 48% of before-tax profits. Because profits are earned on capital investment, it is appropriate to assign the federal tax on the entire Colstrip project in proportion to the capital invested in each phase of the project. Thus, using the Colstrip Project Management's estimates of initial costs of the project, the transmission phase accounts for 25.4% of the total. It is then appropriate to assign 25.4% of the expected federal tax bill to the cost of transmission. This was done in each of the cost-of-transmission estimates. This procedure overlooks the sizable upward adjustment that has been made in the estimates of transmission line costs. However, to properly correct this adjustment, generating unit capital cost would also have to be reconsidered. Under any reasonable conditions the tax would be higher than used here.

6) Opportunity Cost of Line Losses. Line Loss is power that is lost during transmission because of the resistance of the line. The opportunity cost of those losses is their value in alternative uses. The dollar value of line losses may be estimated in two ways: by evaluating the marginal cost (additional cost traceable to producing the lost power) of generation of the lost electricity, or by evaluating the average cost of generation. If a generating facility is already constructed and substantially depreciated, then the marginal cost of generation—essentially the cost of fuel—is the appropriate figure. A new facility such as Colstrip Units 3 and 4, however, requires use of the average cost of generation to correctly portray opportunity cost. This is because the new facility requires a massive initial capital expenditure; if the power is to be shipped long distances, then excess capacity must be built into the generating facility in order to allow for line losses. As a result, the line losses must reflect all of the costs of generation, including initial capital investment.

Because the Colstrip plant is not yet built, average costs of generation are not known. A good proxy, however, was obtained by using the average cost of all privately-generated electricity in the U.S. This was estimated at 7.25 mills/kwh in

1969 (FPC 1971c).

All estimates used the 7.25 mills/kwh figure to evaluate line losses, without a correction for inflation since 1969.

7) Depreciation of line and substations. Because the line and substations have an assumed useful life of 37 years, each year's part of the cost of the line and of the substations is charged against current operations. This is depreciation expense. Straight-line depreciation of 2.7% (1/37) of original cost was used to spread the initial capital cost over the life of the line. This depreciation charge is consistent with other U.S. utilities. The average rate of depreciation used for transmission lines by all investor-owned electric utilities in 1966 was 2.4%. (FPC 1971b)

In states using original cost for rate determination, the rate base is reduced each year by the annual depreciation expense, so that at any point in time the rate base is the original cost less the accumulated depreciation charges to that point in time. In Montana replacement cost, rather than original cost less depreciation, is used in rate making. This means that during periods of price increases, the rate base might increase through time. However, some compensation is probably built in by allowing a lower rate of return than would be allowed with original cost procedures. Original cost less depreciation is used in Tables 6-6 through 6-11.

The results of the calculations of the cost to the customers of building the 500 KV lines are presented in Tables 6-7 through 6-12. Table 6-7 and Table 6-8 both use estimate #1 (See Table 6-5) costs of installation. The only difference between them is that Table 6-7 assumes an 8% rate of return and Table 6-8 assumes a 10% return. Table 6-9 and Table 6-10 use estimate #2 costs of construction, and also differ only in rate of return. Similarly, Tables 6-11 and 6-12 use estimate #3 costs. As mentioned previously, each of the three estimates of construction costs is increased by 12% to allow for interest during construction. The addition to rate base will thus be 12% above the figures shown in Table 6-5. One other point of explanation --- federal corporate income taxes are based on profits as noted previously. Therefore, they will obviously change as the allowed rate of return changes. No adjustment is made here; the tax is calculated as described earlier in the text.

In Table 6-13, the annual cost of coal shipment is presented. The basis for calculation of this table is Table 6-1 and Table 6-19. Costs of shipping are based on a rate of $.0095/ton mile. This figure represents a summation of all the costs referred to above. It includes taxes, depreciation, fuel, labor and capital costs.

The amount of coal shipped depends upon the average load factor of the units. Since load factor is assumed constant for extended periods of time, coal tonnage shipped, and therefore costs, will also remain constant over that interval. It is for this reason that the years are grouped.

TABLE 6-7

Cost to Customers, Transmission Estimate A
Assumed Investment of $220,037,718, Rate of Return of 8%

Cost Figures Are in Thousands of Dollars

(1)	(2)	(3)	(4)	(5)
Year	Rate Base (Original Cost Less Depreciation)	Annual Return to Investment (Col. 2 x .08)	Annual Operating & Maintenance Expense (O.C. x .01)	Annual Property Taxes (O.C. x .0336)
1	220037.7	17603.0	2200.4	7393.3
2	214090.7	17127.2	"	"
3	208143.7	16651.5	"	"
4	202196.7	16175.7	"	"
5	196249.7	15700.0	"	"
6	190302.7	15224.2	"	"
7	184355.7	14748.4	"	"
8	178408.7	14272.7	"	"
9	172461.7	13796.9	"	"
10	166514.7	13321.2	"	"
11	160567.7	12845.4	"	"
12	154620.7	12369.6	"	"
13	148673.7	11893.9	"	"
14	142726.7	11418.1	"	"
15	136779.7	10942.3	"	"
16	130832.7	10466.6	"	"

TABLE 6-7 (cont.)

Cost to Customers, Transmission Estimate 1
Assumed Investment of $220,037,718, Rate of Return of 8%

Cost Figures Are in Thousands of Dollars

(1)	(2)	(3)	(4)	(5)
Year	Rate Base (Original Cost Less Depreciation)	Annual Return to Investment (Col. 2 x .08)	Annual Operating & Maintenance Expense (O.C. x .01)	Annual Property Taxes (O.C. x .0336)
17	124885.7	9991.0	2200.4	7393.3
18	118938.7	9515.1	"	"
19	112991.7	9039.3	"	"
20	107044.7	8563.6	"	"
21	101097.7	8087.8	"	"
22	95150.7	7612.0	"	"
23	89203.7	7136.3	"	"
24	83256.7	6660.5	"	"
25	77309.7	6184.8	"	"
26	71362.7	5709.0	"	"
27	65415.7	5233.2	"	"
28	59468.7	4757.5	"	"
29	53521.7	4281.8	"	"
30	47574.7	3806.0	"	"
31	41627.7	3330.2	"	"
32	35680.7	2854.4	"	"
33	29733.7	2378.7	"	"
34	23786.7	1902.9	"	"
35	17839.7	1427.2	"	"
36	11892.7	951.4	"	"
37	5945.7	475.7	2200.4	7393.3
Total				

TABLE 6-7 (cont.)

Cost to Customers, Transmission Estimate 1
Assumed Investment of $220,037,718, Rate of Return of 8%

Cost Figures Are in Thousands of Dollars

Year	(6) Annual Federal Income Taxes (See Table 6-5)	(7) Annual Line Losses ($7.25/MWH x Table 6-1)	(8) Annual Depreciation Expense (O.C. ÷ 37)	(9) Annual Revenue Requirement (Summation of Col's. 3 thru 8)
1	2331.2	3251.7	5947.0	38726.6
2	"	"	"	38250.8
3	"	"	"	37775.1
4	"	"	"	37299.3
5	"	"	"	36823.6
6	"	"	"	36347.8
7	"	"	"	35872.0
8	"	"	"	35396.3
9	"	"	"	34920.5
10	2186.2	3048.5	"	34096.6
11	"	"	"	33620.8
12	"	"	"	33145.0
13	"	"	"	32669.3
14	"	"	"	32193.5
15	"	"	"	31717.7
16	"	"	"	31242.0

TABLE 6-7 (cont.)

Cost to Customers, Transmission Estimate 1
Assumed Investment of $220,037,718, Rate of Return of 8%

Cost Figures Are in Thousands of Dollars

Year	(6) Annual Federal Income Taxes (See Table 6-5)	(7) Annual Line Losses ($7.25/MWH x Table 6-1)	(8) Annual Depreciation Expense (O.C. ÷ 37)	(9) Annual Revenue Requirement (Summation of Col's. 3 thru 8)
17	1894.7	2642.0	5947.0	30068.4
18	"	"	"	29592.5
19	"	"	"	29116.7
20	"	"	"	28641.0
21	"	"	"	28165.2
22	"	"	"	27689.4
23	"	"	"	27213.7
24	1603.2	2235.6	"	26040.0
25	"	"	"	25564.3
26	"	"	"	25088.5
27	"	"	"	24612.7
28	"	"	"	24137.0
29	"	"	"	23661.3
30	"	"	"	23185.5
31	1311.7	1829.1	"	22011.7
32	"	"	"	21535.9
33	"	"	"	21060.2
34	"	"	"	20584.4
35	"	"	"	20108.7
36	"	"	5947.0	19632.9
37	"	"	5945.7	19155.9
Total				1076962.8

TABLE 6-8

Cost to Customers, Transmission Estimate B
Assumed Investment of $220,037,718, Rate of Return of 10%

Cost Figures Are in Thousands of Dollars

(1)	(2)	(3)	(4)	(5)
Year	Rate Base (Original Cost Less Depreciation)	Annual Return to Investment (Col. 2 x .10)	Annual Operating & Maintenance Expense (O.C. x .01)	Annual Property Taxes (O.C. x .0336)
1	220037.7	22003.8	2200.4	7393.3
2	214090.7	21409.1	"	"
3	208143.7	20814.4	"	"
4	202196.7	20219.7	"	"
5	196249.7	19625.0	"	"
6	190302.7	19030.3	"	"
7	184355.7	18435.6	"	"
8	178408.7	17840.9	"	"
9	172461.7	17246.2	"	"
10	166514.7	16651.5	"	"
11	160567.7	16056.8	"	"
12	154620.7	15462.1	"	"
13	148673.7	14867.4	"	"
14	142726.7	14272.7	"	"
15	136779.7	13678.0	"	"
16	130832.7	13083.3	"	"

TABLE 6-8 (cont.)

Cost to Customers, Transmission Estimate B
Assumed Investment of $220,037,718, Rate of Return of 10%

Cost Figures Are in Thousands of Dollars

(1)	(2)	(3)	(4)	(5)
Year	Rate Base (Original Cost Less Depreciation)	Annual Return to Investment (Col. 2 x .10)	Annual Operating & Maintenance Expense (O.C. x . 01)	Annual Property Taxes (O.C. x .0336)
17	124885.7	12488.6	2200.4	7393.3
18	118938.7	11893.9	"	"
19	112991.7	11299.2	"	"
20	107044.7	10704.5	"	"
21	101097.7	10109.8	"	"
22	95150.7	9515.1	"	"
23	89203.7	8920.4	"	"
24	83256.7	8325.7	"	"
25	77309.7	7731.0	"	"
26	71362.7	7136.3	"	"
27	65415.7	6541.6	"	"
28	59468.7	5946.9	"	"
29	53521.7	5352.2	"	"
30	47574.7	4757.5	"	"
31	41627.7	4162.8	"	"
32	35680.7	3568.1	"	"
33	29733.7	2973.4	"	"
34	23786.7	2378.7	"	"
35	17839.7	1784.0	"	"
36	11892.7	1189.3	"	"
37	5945.7	594.6	"	"
Total				

TABLE 6-8 (cont.)

Cost to Customers, Transmission Estimate B
Assumed Investment of $220,037,718, Rate of Return of 10%

Cost Figures Are in Thousands of Dollars

Year	(6) Annual Federal Income Taxes (See Table 6-5)	(7) Annual Line Losses ($2.25/MWH x Table 6-1)	(8) Annual Depreciation Expense (O.C. ÷ 37)	(9) Annual Revenue Requirement (Summation of Col's. 3 thru 8)
1	2331.2	3251.7	5947.0	43127.4
2	"	"	"	42532.7
3	"	"	"	41938.0
4	"	"	"	41343.3
5	"	"	"	40748.6
6	"	"	"	40153.9
7	"	"	"	39559.2
8	"	"	"	38964.5
9	"	"	"	38369.8
10	2186.2	3048.5	"	37426.9
11	"	"	"	36832.2
12	"	"	"	36237.5
13	"	"	"	35642.8
14	"	"	"	35048.1
15	"	"	"	34453.4
16	"	"	"	33858.7

TABLE 6-8 (cont.)

Cost to Customers, Transmission Estimate B
Assumed Investment of $220,037,718, Rate of Return of 10%

Cost Figures Are in Thousands of Dollars

Year	(6) Annual Federal Income Taxes (See Table 6-5)	(7) Annual Line Losses ($7.25/MWH x Table 6-1)	(8) Annual Depreciation Expense (O.C. ÷ 37)	(9) Annual Revenue Requirement (Summation of Col's. 3 thru 8)
17	1894.7	2642.0	5947.0	32566.0
18	"	"	"	31971.3
19	"	"	"	31376.6
20	"	"	"	30781.9
21	"	"	"	30187.2
22	"	"	"	29592.5
23	"	"	"	28997.8
24	1603.2	2235.6	"	27705.2
25	"	"	"	27110.5
26	"	"	"	26515.8
27	"	"	"	25921.1
28	"	"	"	25326.4
29	"	"	"	24731.7
30	"	"	"	24137.0
31	1311.7	1829.1	"	22844.3
32	"	"	"	22249.6
33	"	"	"	21654.9
34	"	"	"	21060.2
35	"	"	"	20465.5
36	"	"	5947.0	19870.8
37	"	"	5945.7	19274.8
Total				1160598.1

TABLE 6-9

Cost to Customers, Transmission Estimate C
Assumed Investment of $277,841,760, Rate of Return of 8%

Cost Figures Are in Thousands of Dollars

(1)	(2)	(3)	(4)	(5)
Year	Rate Base (Original Cost Less Depreciation)	Annual Return to Investment (Col. 2 x .08)	Annual Operating & Maintenance Expense (O.C. x .01)	Annual Property Taxes (O.C. x .0336)
1	277841.8	22227.3	2778.4	9335.5
2	270332.6	21626.6	"	"
3	262823.4	21025.9	"	"
4	255314.2	20425.1	"	"
5	247805.0	19824.4	"	"
6	240295.8	19223.7	"	"
7	232786.6	18622.9	"	"
8	225277.4	18022.2	"	"
9	217768.2	17421.5	"	"
10	210259.0	16820.7	"	"
11	202749.8	16220.0	"	"
12	195240.6	15619.2	"	"
13	187731.4	15018.5	"	"
14	180222.2	14417.8	"	"
15	172713.0	13817.0	"	"
16	165203.8	13216.3	"	"

TABLE 6-9 (cont.)

Cost to Customers, Transmission Estimate C
Assumed Investment of $277,841,760, Rate of Return of 8%

Cost Figures Are in Thousands of Dollars

(1)	(2)	(3)	(4)	(5)
Year	Rate Base (Original Cost Less Depreciation)	Annual Return to Investment (Col. 2 x .08)	Annual Operating & Maintenance Expense (O.C. x .01)	Annual Property Taxes (O.C. x .0336)
17	157694.6	12615.6	2778.4	9335.5
18	150185.4	12014.8	"	"
19	142676.2	11414.1	"	"
20	135167.0	10813.4	"	"
21	127657.8	10212.6	"	"
22	120148.6	9611.9	"	"
23	112639.4	9011.2	"	"
24	105130.2	8410.4	"	"
25	97621.0	7809.7	"	"
26	90111.8	7208.9	"	"
27	82602.6	6608.2	"	"
28	75093.4	6007.5	"	"
29	67584.2	5406.7	"	"
30	60075.0	4806.0	"	"
31	52565.8	4205.3	"	"
32	45056.6	3604.5	"	"
33	37547.4	3003.8	"	"
34	30038.2	2403.1	"	"
35	22529.0	1802.3	"	"
36	15019.8	1201.6	"	"
37	7510.6	600.8	"	"
Total				

TABLE 6-9 (cont.)

Cost to Customers, Transmission Estimate C
Assumed Investment of $277,841,760, Rate of Return of 8%

Cost Figures Are in Thousands of Dollars

Year	(6) Annual Federal Income Taxes (See Table 6-5)	(7) Annual Line Losses ($7.25/MWH x Table 6-1)	(8) Annual Depreciation Expense (O.C. ÷ 37)	(9) Annual Revenue Requirement (Summation of Col's. 3 thru 8)
1	2331.2	3251.7	7509.2	47433.3
2	"	"	"	46832.6
3	"	"	"	46231.9
4	"	"	"	45631.1
5	"	"	"	45030.4
6	"	"	"	44429.7
7	"	"	"	43828.9
8	"	"	"	43228.2
9	"	"	"	42627.5
10	2186.2	3048.5	"	41678.5
11	"	"	"	41077.8
12	"	"	"	40477.0
13	"	"	"	39876.3
14	"	"	"	39275.6
15	"	"	"	38674.8
16	"	"	"	38074.1

TABLE 6-9 (cont.)

Cost to Customers, Transmission Estimate C
Assumed Investment of $277,841,760, Rate of Return of 8%

Cost Figures Are in Thousands of Dollars

Year	(6) Annual Federal Income Taxes (See Table 6-5)	(7) Annual Line Losses ($7.25/MWH x Table 6-1)	(8) Annual Depreciation Expense (O.C. ÷ 37)	(9) Annual Revenue Requirement (Summation of Col's. 3 thru 8)
17	1894.7	2642.0	7509.2	36775.4
18	"	"	"	36174.6
19	"	"	"	35573.9
20	"	"	"	34973.2
21	"	"	"	34372.4
22	"	"	"	33771.7
23	"	"	"	33171.0
24	1603.2	2235.6	"	31872.3
25	"	"	"	31271.6
26	"	"	"	30670.8
27	"	"	"	30070.1
28	"	"	"	29469.4
29	"	"	"	28868.6
30	"	"	"	28267.9
31	1311.7	1829.1		26969.1
32	"	"	"	26368.4
33	"	"	"	25767.7
34	"	"	"	25167.0
35	"	"	"	24566.2
36	"	"	7509.2	23965.5
37	"	"	7510.6	23366.1
Total				1315880.6

TABLE 6-10

Cost to Customers, Transmission Estimate D
Assumed Investment of $277,841,760, Rate of Return of 10%

Cost Figures are in Thousands of Dollars

(1)	(2)	(3)	(4)	(5)
Year	Rate Base (Original Cost Less Depreciation)	Annual Return to Investment (Col.2x.10)	Annual Operating & Maintenance Expense (O.C.x.01)	Annual Property Taxes (O.C.x.01)
1	277821.8	27784.2	2778.4	9335.5
2	270332.6	27033.3	"	"
3	262823.4	26282.3	"	"
4	255314.2	25531.4	"	"
5	247805.0	24780.5	"	"
6	240295.8	24029.6	"	"
7	232786.6	23278.7	"	"
8	225277.4	22527.7	"	"
9	217768.2	21776.8	"	"
10	210259.0	21025.9	"	"
11	202749.8	20275.0	"	"
12	195240.6	19524.1	"	"
13	187731.4	18773.1	"	"
14	180222.2	18022.2	"	"
15	172713.0	17271.3	"	"
16	165203.8	16520.4	"	"

TABLE 6-10

Cost to Customers, Transmission Estimate D
Assumed Investment of $277,841,760, Rate of Return of 10%

Cost Figures are in Thousands of Dollars

Year	(6) Annual Federal Income Taxes(See Table 6-5)	(7) Annual Line Losses ($7.25/MWH x Table 6-1)	(8) Annual Depreciation Expense (O.C.÷37)	(9) Annual Revenue Requirement (Summation of Col's. 3 thru 8)
1	2331.2	3251.7	7509.2	52990.2
2	"	"	"	52239.3
3	"	"	"	51488.3
4	"	"	"	50737.4
5	"	"	"	49986.5
6	"	"	"	49235.6
7	"	"	"	48484.7
8	"	"	"	47733.7
9	"	"	"	46982.8
10	2186.2	3048.5	"	45883.7
11	"	"	"	45132.8
12	"	"	"	44381.9
13	"	"	"	43630.9
14	"	"	"	42880.0
15	"	"	"	42129.1
16	"	"	"	21378.2

TABLE 6-10

Cost to Customers, Transmission Estimate D
Assumed Investment of $277,841,760, Rate of Return of 10%

Cost Figures are in Thousands of Dollars

(1)	(2)	(3)	(4)	(5)
Year	Rate Base (Original Cost Less Depreciation)	Annual Return to Investment (Col.2x.10)	Annual Operating & Maintenance Expense (O.C.x.01)	Annual Property Taxes (O.C.x.01)
17	157694.6	15769.5	2778.4	9335.5
18	150185.4	15018.5	"	"
19	142676.2	14267.6	"	"
20	135167.0	13516.7	"	"
21	127657.8	12765.8	"	"
22	120148.6	12014.9	"	"
23	112639.4	11263.9	"	"
24	105130.2	10513.0	"	"
25	97621.0	9762.1	"	"
26	90111.8	9011.2	"	"
27	82602.6	8260.3	"	"
28	75093.4	7509.3	"	"
29	67584.2	6758.4	"	"
30	60075.0	6007.5	"	"
31	52565.8	5256.6	"	"
32	45056.6	4505.7	"	"
33	37547.4	3754.7	"	"
34	30038.2	3003.8	"	"
35	22529.0	2252.9	"	"
36	15019.8	1502.0	"	"
37	7510.6	751.1	"	"
TOTAL				

TABLE 6-10

Cost to Customers, Transmission Estimate D
Assumed Investment of $277,841,760, Rate of Return of 10%

Cost Figures are in Thousands of Dollars

Year	(6) Annual Federal Income Taxes(See Table 6-5)	(7) Annual Line Losses ($7.25/MWH x Table 6-1)	(8) Annual Depreciation Expense (O.C.÷37)	(9) Annual Revenue Requirement (Summation of Col's. 3 thru 8)
17	1894.7	2642.0	7509.2	39929.3
18	"	"	"	39178.3
19	"	"	"	38127.4
20	"	"	"	37676.5
21	"	"	"	36925.6
22	"	"	"	36174.7
23	"	"	"	35423.7
24	1603.2	2235.6	"	33974.9
25	"	"	"	33224.0
26	"	"	"	32473.1
27	"	"	"	31722.2
28	"	"	"	30971.2
29	"	"	"	30220.3
30	"	"	"	29469.4
31	1311.7	1829.1	"	28020.5
32	"	"	"	27269.6
33	"	"	"	26518.6
34	"	"	"	25767.7
35	"	"	"	25016.8
36	"	"	"	24265.9
37	"	"	"	23516.4
TOTAL				1421164.2

TABLE 6-11

Cost to Customer, Transmission Estimate
Assumed Investment of $206,273,800, Rate of Return of 8%
Cost Figures are in Thousands of Dollars

(1)	(2)	(3)	(4)	(5)
Year	Rate Base Original Cost Less Depreciation	Annual Return to Investment (Col. 2 x .08)	Annual Operating & Maintenance Expense (O.C. x .01)	Annual Property Taxes (O.C. x .0336)
1	206273.8	16501.9	2062.7	6930.8
2	200698.8	16055.9	"	"
3	195123.8	15609.9	"	"
4	189548.8	15163.9	"	"
5	183973.8	14717.9	"	"
6	178398.8	14271.9	"	"
7	172823.8	13825.9	"	"
8	167248.8	13379.9	"	"
9	161673.8	12933.9	"	"
10	156098.8	12487.9	"	"
11	150523.8	12041.9	"	"
12	144948.8	11595.9	"	"
13	139373.8	11149.9	"	"
14	133798.8	10703.9	"	"
15	128223.8	10257.9	"	"
16	122648.8	9811.9	"	"
17	117073.8	9365.9	"	"
18	111498.8	8919.9	"	"
19	105923.8	8473.9	"	"
20	100348.8	8027.9	"	"
21	94773.8	7581.9	"	"
22	89198.8	7135.9	"	"
23	83623.8	6689.9	"	"

TABLE 6-11 (cont.)

Year	(6) Annual Federal Income Taxes (See Table 6-5)	(7) Annual Line Losses ($7.25/MWH x Table 6-1)	(8) Annual Depreciation Expense (O.C. ÷ 37)	(9) Annual Revenue Requirement (Summation of Col.s 3 thr 8)
24	1603.2	2235.6	"	24651.2
25	"	"	"	24205.2
26	"	"	"	23759.2
27	"	"	"	23313.2
28	"	"	"	22867.2
29	"	"	"	22421.2
30	"	"	"	21975.2
31	1311.7	1829.1	"	20831.2
32	"	"	"	20385.2
33	"	"	"	19939.2
34	"	"	"	19493.2
35	"	"	"	19047.2
36	"	"	5575.0	18601.2
37	"	"	5573.8	18154.0
TOTAL				1020070.7

TABLE 6-11 (cont.)

Year	(6) Annual Federal Income Taxes (See Table 6-5)	(7) Annual Line Losses ($7.25/MWH x Table 6-1)	(8) Annual Depreciation Expense (O.C. ÷ 37)	(9) Annual Revenue Requirement (Summation of Col.s 3 thru 8)
1	2331.2	3251.7	5575.0	36653.3
2	"	"	"	36207.3
3	"	"	"	35761.3
4	"	"	"	35315.3
5	"	"	"	34869.3
6	"	"	"	34423.3
7	"	"	"	33977.3
8	"	"	"	33531.3
9	"	"	"	33085.3
10	2186.2	3048.5	"	32291.1
11	"	"	"	31845.1
12	"	"	"	31399.1
13	"	"	"	30953.1
14	"	"	"	30507.1
15	"	"	"	30061.1
16	"	"	"	29615.1
17	1894.7	2642.0	"	28471.1
18	"	"	"	28025.1
19	"	"	"	27579.1
20	"	"	"	27133.1
21	"	"	"	26687.1
22	"	"	"	26241.1
23	"	"	"	25795.1

TABLE 6-11 (cont.)

(1) Year	(2) Rate Base Original Cost Less Depreciation	(3) Annual Return to Investment (Col.2 x .08)	(4) Annual Operating & Maintenance Expense (o.c. x .01)	(5) Annual Property Taxes (O.C. x 0336)
24	78048.8	6243.9	"	"
25	72473.8	5797.9	"	"
26	66898.8	5351.9	"	"
27	61323.8	4905.9	"	"
28	55748.8	4459.9	"	"
29	50173.8	4013.9	"	"
30	44598.8	3567.9	"	"
31	39023.8	3121.9	"	"
32	33448.8	2675.9	"	"
33	27873.8	2229.9	"	"
34	22298.8	1783.9	"	"
35	16723.8	1337.9	"	"
36	11148.8	891.9	"	"
37	5573.8	445.9	"	"

TABLE 6-12

Cost to Customers, Transmission Estimate
Assumed Investment of 206,273.8 , Rate of Return of 10%
Cost Figures are in Thousands of Dollars

(1)	(2)	(3)	(4)	(5)
Year	Rate Base (Original Cost Less Depreciation)	Annual Return to Investment (Col. 2 x .10)	Annual Operating & Maintenance Expense (O.C. x .01)	Annual Property Taxes (O.C. x .0336)
1	206273.8	20627.4	2062.7	6930.8
2	200698.8	20069.9	"	"
3	195123.8	19512.4	"	"
4	189548.8	18954.9	"	"
5	183973.8	18397.4	"	"
6	178398.8	17839.9	"	"
7	172823.8	17282.4	"	"
8	167248.8	16724.9	"	"
9	161673.8	16167.4	"	"
10	156098.8	15609.9	"	"
11	150523.8	15052.4	"	"
12	144948.8	14494.9	"	"
13	139373.8	13937.4	"	"
14	133798.8	13379.9	"	"
15	128223.8	12822.4	"	"
16	122648.8	12264.9	"	"
17	117073.8	11707.4	"	"
18	111498.8	11149.9	"	"
19	105923.8	10592.4	"	"
20	100348.8	10034.9	"	"
21	94773.8	9477.4	"	"
22	89198.8	8919.9	"	"
23	83623.8	8362.4	"	"

TABLE 6-12 (cont.)

(1)	(2)	(3)	(4)	(5)
Year	Rate Base (Original Cost Less Depreciation)	Annual Return to Investment (Col. 2 x .10)	Annual Operating & Maintenance Expense (O.C. x .01)	Annual Property Taxes (O.C. x .0336)
24	78048.8	7804.9	2062.7	6930.8
25	72473.8	7247.4	"	"
26	66898.8	6689.9	"	"
27	61323.8	6132.4	"	"
28	55748.8	5574.9	"	"
29	50173.8	5017.4	"	"
30	44598.8	4459.9	"	"
31	39023.8	3902.4	"	"
32	33448.8	3344.9	"	"
33	27873.8	2787.4	"	"
34	22298.8	2229.9	"	"
35	16723.8	1672.4	"	"
36	11148.8	1114.9	"	"
37	5573.8	557.4	"	"

TABLE 6-12 (cont.)

(1)	(6)	(7)	(8)	(9)
Year	Annual Federal Income Taxes (See Table 6-5)	Annual Line Losses ($7.25/MWH x Table 6-1)	Annual Depreciation Expense (O.C. ÷ 37)	Annual Revenue Requirement (Summation of Cols. 3 thru 8)
1	2331.2	3251.7	5575.0	40778.8
2	"	"	"	40221.3
3	"	"	"	39663.8
4	"	"	"	39106.3
5	"	"	"	38548.8
6	"	"	"	37991.3
7	"	"	"	37433.8
8	"	"	"	36876.3
9	"	"	"	36318.8
10	2186.2	3048.5	"	35413.1
11	"	"	"	34855.6
12	"	"	"	34298.1
13	"	"	"	33740.6
14	"	"	"	33183.1
15	"	"	"	32625.6
16	"	"	"	32068.1
17	1894.7	2642.0	"	30812.6
18	"	"	"	30255.1
19	"	"	"	29697.6
20	"	"	"	29140.1
21	"	"	"	28582.6
22	"	"	"	28025.1
23	"	"	"	27467.6

TABLE 6-12 (cont.)

(1)	(6)	(7)	(8)	(9)
Year	Annual Federal Income Taxes (See Table 6-5)	Annual Line Losses ($7.25/MWH x Table 6-1)	Annual Depreciation Expense (O.C. ÷ 37)	Annual Revenue Requirement (Summation of Cols. 3 thru 8)
24	1603.2	2235.6	5575.0	26212.2
25	"	"	"	25654.7
26	"	"	"	25097.2
27	"	"	"	24539.7
28	"	"	"	23982.2
29	"	"	"	23424.7
30	"	"	"	22867.2
31	1311.7	1829.1	"	21611.7
32	"	"	"	21054.2
33	"	"	"	20496.7
34	"	"	"	19939.2
35	"	"	"	19381.7
36	"	"	"	18824.2
37	"	"	5573.8	18265.5
TOTAL				1098455.2

TABLE 6-13

Period (Years)	Average Load Factor	Annual Coal Tonnage	Shipping Cost per Year ($000)
1- 9	80%	5,796,000	30,504.5
10-16	75%	5,433,750	28,597.8
17-23	65%	4,709,250	24,784.8
24-30	55%	3,984,750	20,971.7
31-37	45%	3,260,250	17,158.7

The comparative costs of coal shipment versus the six (A through F) estimates of transmission line costs are shown in Figure 6-1. The total costs over the 37-year life of the facilities are compared in Table 6-14.

TABLE 6-14

Comparison of Total Estimated Costs to Customers of Transmission Estimates to Coal Shipment Estimate

Estimate	Total 37 Year Costs ($000)	% of Total Costs of Coal Shipment
Transmission A	1,076, 963	118
Transmission B	1,160,578	127
Transmission C	1,315,881	144
Transmission D	1,421,164	155
Transmission E	1,020,071	111
Transmission F	1,098,455	120
Coal Shipment	915,132 /1	100

The conclusion is obvious: based on the estimates used, the cost to the customer of transmitting energy from Colstrip to Hot Springs via two 500 KV lines is much higher than the costs of shipping equivalent amounts of coal to Hot Springs.

6.1.3. Costs to the Applicants

In this section, costs affecting the applicant companies and BPA are considered. Because they own and operate the transmission lines over which Colstrip energy would flow from Hot Springs west, BPA costs must also be included if any location west of Hot Springs is considered. For purposes of this comparison, an end point in the vicinity of Spokane, Washington, is used. Again, as in the previous section where Hot Springs was selected as the end point, Spokane is not being suggested as the alternative site, but it is put forward as a single point of comparison. There are undoubtedly other, more favorable, comparison locations.

6.1.3.1. The Costs Compared

For purposes of this cost comparison, only the actual direct dollar costs to the companies and to BPA are considered. Unlike the comparison of customer costs, no allowance for return to capital is made. Likewise, federal income taxes are excluded. Included are those costs directly attributable to building Units 3 and 4 in Colstrip, Montana, rather than in Spokane, Washing-

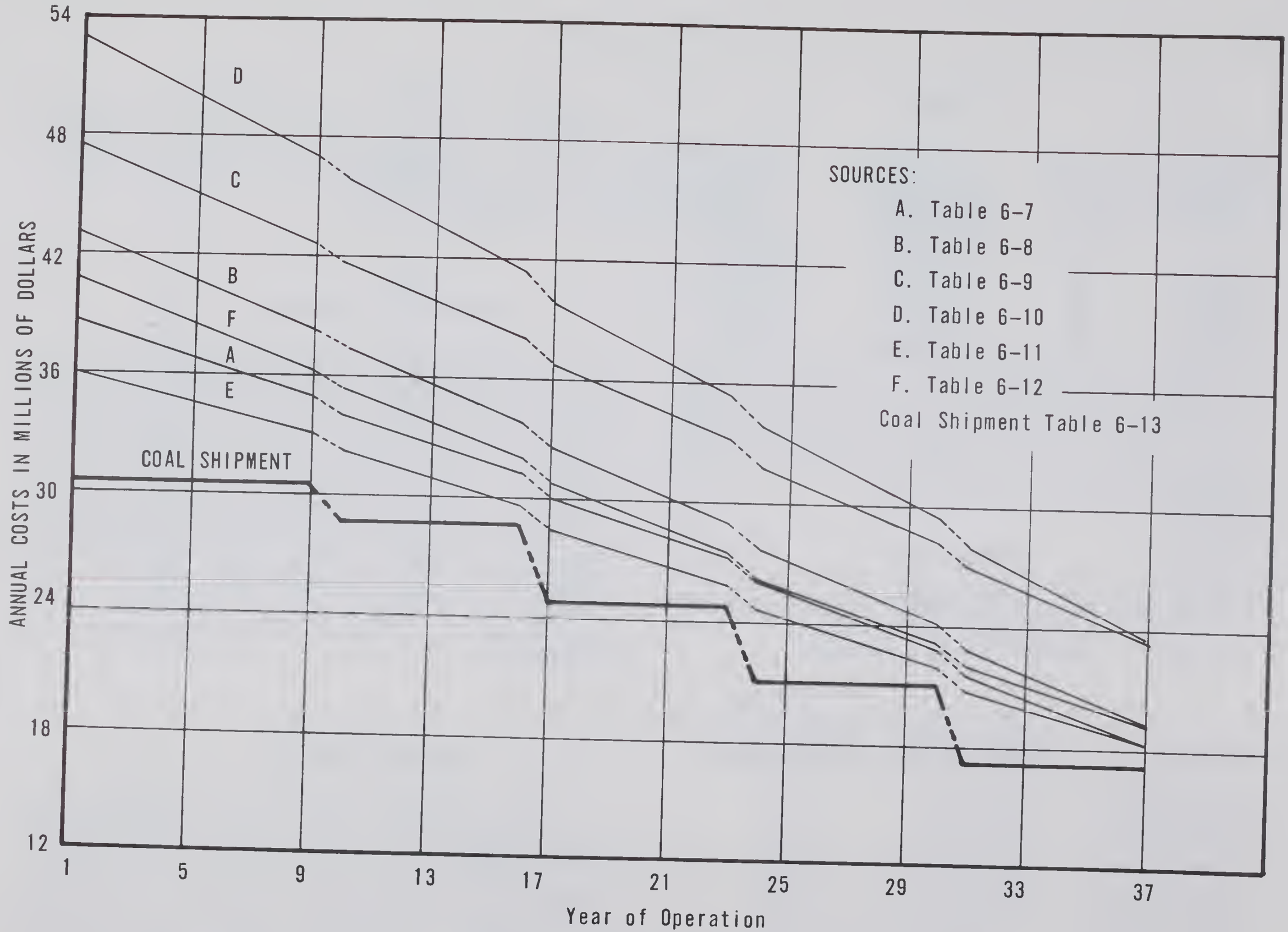

Comparison of Costs to Electric Customers:
Coal Shipment Versus Six Estimates of Transmission Costs

FIGURE 6-1

ton, such as differences in investment costs and differences in annual operating costs. For simplicity they are kept separate here.

A. Differences in Investment Costs

The biggest single difference in investment costs is in the construction of the transmission lines from Colstrip to Spokane. A distance of 430 miles is assumed from Colstrip to Hot Springs and 165 miles from Hot Springs to Spokane. Between Colstrip and Broadview (110 miles) it is assumed that only one line is needed; from Broadview to Hot Springs two lines are assumed and from Hot Springs to Spokane only a single line is assumed.

Two different line construction cost estimates are used. The first parallels estimate 2 in Table 6-5 for the 750 line miles from Colstrip to Broadview ($250,000/mile); BPA figures from Table 6-3 ($266,500/mile) are used for the 165 miles from Hot Springs to Spokane. Total line costs resulting are $231,472,500. This figure is used in Table 6-15.

The second line cost estimate is based on estimate 3 (Table 6-5) figures for the 750 miles of line to be built by the applicants ($175,000/mile plus $266,500/mile for the BPA segment from Hot Springs to Spokane. The resulting total line construction costs of $175,222,500 are used in Table 6-16.

Both estimates of line construction costs assume a single line is needed from Colstrip to Broadview; this in reality understates the cost by assuming one line is already built from Colstrip to Broadview./2

A second capital investment is the substation equipment associated with the 500 KV lines. An estimate of $35,073,000 (Westinghouse 1973) is used here.

A third capital expenditure necessitated by a Colstrip siting of Units 3 and 4 is the 30 miles of water supply line from Nichols to Colstrip, and the associated pumping facility. This investment is estimated at $14,764,500 (Evans 1974).

The fourth and last capital expenditure necessitated by the Colstrip site is the additional generating capacity utilized just to cover line losses. If the units were built in Spokane, they could be built appreciably smaller and still yield the same potential peak output. A peak line loss figure of 5% is used and applied to the total estimated installed costs of Units 3 and 4 (Westinghouse 1973). This yields a capital cost of capacity of $17,850,000.

These four additions in capital investment yield a total investment of $299,160,000 and $242,910,000 in Tables 6-15 and 6-16 respectively.

An additional capacity loss charge might be made to cover the pumping energy used to get cooling water from Nichols to Colstrip. However, as long as there is sufficient reserve in the surge pond, pumping could be scheduled at off peak hours, and output capability would not be affected.

TABLE 6-15

Discounted Present Value of Estimate 1 Additional Costs of Siting Units 3 and 4 at Colstrip and Transmitting Energy to Spokane. All Cost in 1974 Dollars. Discount Rate 10%, Initial Year is 1975

Thousands of Dollars

Year	Capital Investment	Property Taxes	Operating and Maintenance Expense	Line Losses	Pumping Energy Costs	Total Costs in Year of Expenditure	Discount Denominator $(1.10)^{t-1}$	Discounted to Year 1975
1975	24,930.0					24,930.0	1.0	24,930.0
1976	74,790.0					74,790.0	1.10	67,990.9
1977	99,720.0					99,720.0	1.210	82,413.2
1978	74,790.0	1,869.6	333.2	365.3	18	77,376.1	1.3310	58,133.8
1979	24,930.0	5,608.9	999.5	1,095.9	54	32,688.3	1.46410	22,326.5
1980		7,478.5	1,332.7	1,461.2	72	10,344.4	1.61051	6,423.1
1981		7,478.5	1,332.7	1,461.2	72	10,344.4	1.77156	5,839.1
1982		7,478.5	1,332.7	1,461.2	72	10,344.4	1.94872	5,308.3
1983		7,478.5	1,332.7	1,461.2	72	10,344.4	2.14359	4,825.7
1984		7,478.5	1,332.7	1,461.2	72	10,344.4	2.35795	4,387.0
1985		7,478.5	1,332.7	1,461.2	72	10,344.4	2.59374	3,988.2
1986		7,478.5	1,332.7	1,461.2	72	10,344.4	2.85312	3,625.6
1987		7,478.5	1,332.7	1,461.2	72	10,344.4	3.13843	3,296.0
1988		7,478.5	1,332.7	1,369.8	67.5	10,248.5	3.45227	2,968.6
1989		7,478.5	1,332.7	1,369.8	67.5	10,248.5	3.79750	2,698.8
1990		7,478.5	1,332.7	1,369.8	67.5	10,248.5	4.17725	2,453.4
1991		7,478.5	1,332.7	1,369.8	67.5	10,248.5	4.59497	2,230.4
1992		7,478.5	1,332.7	1,369.8	67.5	10,248.5	5.05447	2,027.6
1993		7,478.5	1,332.7	1,369.8	67.5	10,248.5	5.55992	1,843.3
1994		7,478.5	1,332.7	1,369.8	67.5	10,248.5	6.11591	1,675.7

TABLE 6-15
(continued)

Year	Capital Investment	Property Taxes	Operating and Maintenance Expense	Line Losses	Pumping Energy Costs	Total Costs in Year of Expenditure	Discount Denominator $(1.10)^{t-1}$	Discounted to Year 1975
		Thousands of Dollars						
1995		7,478.5	1,332.7	1,187.2	58.5	10,056.9	6.72750	1,494.9
1996		7,478.5	1,332.7	1,187.2	58.5	10,056.9	7.40025	1,359.0
1997		7,478.5	1,332.7	1,187.2	58.5	10,056.9	8.14027	1,235.4
1998		7,478.5	1,332.7	1,187.2	58.5	10,056.9	8.95430	1,123.1
1999		7,478.5	1,332.7	1,187.2	58.5	10,056.9	9.84973	1,021.0
2000		7,478.5	1,332.7	1,187.2	58.5	10,056.9	10.83471	928.2
2001		7,478.5	1,332.7	1,187.2	58.5	10,056.9	11.91818	843.8
2002		7,478.5	1,332.7	1,004.6	49.5	9,865.3	13.10999	752.5
2003		7,478.5	1,332.7	1,004.6	49.5	9,865.3	14.42099	684.1
2004		7,478.5	1,332.7	1,004.6	49.5	9,865.3	15.86309	621.9
2005		7,478.5	1,332.7	1,004.6	49.5	9,865.3	17.44940	565.4
2006		7,478.5	1,332.7	1,004.6	49.5	9,865.3	19.19434	514.0
2007		7,478.5	1,332.7	1,004.6	49.5	9,865.3	21.11378	467.2
2008		7,478.5	1,332.7	1,004.6	49.5	9,865.3	23.22515	424.8
2009		7,478.5	1,332.7	821.9	40.5	9,673.6	25.54767	378.6
2010		7,478.5	1,332.7	821.9	40.5	9,673.6	28.10244	344.2
2011		7,478.5	1,332.7	821.9	40.5	9,673.6	30.91268	312.9
2012		7,478.5	1,332.7	821.9	40.5	9,673.6	34.00395	284.5
2013		7,478.5	1,332.7	821.9	40.5	9,673.6	37.40434	258.6
2014		7,478.5	1,332.7	821.9	40.5	9,673.6	41.14478	235.1
2015		7,478.5	1,332.7	821.9	40.5	9,673.6	45.25926	213.7
TOTAL	299,160.0							323,448.1

TABLE 6-16

Discounted Present Value of Estimate 2 Additional Costs of Siting Units 3 and 4 at Colstrip and Transmitting Energy to Spokane All Costs in 1974 Dollars. Discount Rate 10%, Initial Year is 1975

Thousands of Dollars

Year	Capital Investment	Property Taxes	Operating and Maintenance Expense	Line Losses	Pumping Energy Costs	Total Costs in Year of Expenditure	Discount Denominator $(1.10)^{t-1}$	Discounted 1975 Costs
1975	20,242.5					20,242.5	1.0	20,242.5
1976	60,727.5					60,727.5	1.10	55,206.8
1977	80,970.0					80,970.0	1.210	66,917.4
1978	60,727.5	1,397.1	262.9	365.3	18	62,770.8	1.3310	47,160.6
1979	20,242.5	4,191.3	788.6	1,095.9	54	26,372.3	1.46410	18,012.6
1980		5,588.4	1,051.5	1,461.2	72	8,173.1	1.61051	5,074.9
1981		5,588.4	1,051.5	1,461.2	72	8,173.1	1.77156	4,613.5
1982		5,588.4	1,051.5	1,461.2	72	8,173.1	1.94872	4,194.1
1983		5,588.4	1,051.5	1,461.2	72	8,173.1	2.14359	3,812.8
1984		5,588.4	1,051.5	1,461.2	72	8,173.1	2.35795	3,466.2
1985		5,588.4	1,051.5	1,461.2	72	8,173.1	2.59374	3,151.1
1986		5,588.4	1,051.5	1,461.2	72	8,173.1	2.85312	2,864.6
1987		5,588.4	1,051.5	1,461.2	72	8,173.1	3.13843	2,604.2
1988		5,588.4	1,051.5	1,369.8	67.5	8,077.2	3.45227	2,339.7
1989		5,588.4	1,051.5	1,369.8	67.5	8,077.2	3.79750	2,127.0
1990		5,588.4	1,051.5	1,369.8	67.5	8,077.2	4.17725	1,933.6
1991		5,588.4	1,051.5	1,369.8	67.5	8,077.2	4.59497	1,757.8
1992		5,588.4	1,051.5	1,369.8	67.5	8,077.2	5.05447	1,598.0
1993		5,588.4	1,051.5	1,369.8	67.5	8,077.2	5.55992	1,452.8
1994		5,588.4	1,051.5	1,369.8	67.5	8,077.2	6.11591	1,320.7

TABLE 6-16
(continued)

Year	Capital Investment	Property Taxes	Operating and Maintenance Expense	Line Losses	Pumping Energy Costs	Total Costs in Year of Expenditure	Discount Denominator $(1.10)^{t-1}$	Discounted 1975 Costs
		Thousands of Dollars						
1995		5,588.4	1,051.5	1,187.2	58.5	7,885.6	6.72750	1,172.1
1996		5,588.4	1,051.5	1,187.2	58.5	7,885.6	7.40025	1,065.6
1997		5,588.4	1,051.5	1,187.2	58.5	7,885.6	8.14027	968.7
1998		5,588.4	1,051.5	1,187.2	58.5	7,885.6	8.95430	880.6
1999		5,588.4	1,051.5	1,187.2	58.5	7,885.6	9.84973	800.6
2000		5,588.4	1,051.5	1,187.2	58.5	7,885.6	10.83471	727.8
2001		5,588.4	1,051.5	1,187.2	58.5	7,885.6	11.91818	661.6
2002		5,588.4	1,051.5	1,004.6	49.5	7,694.0	13.10999	586.9
2003		5,588.4	1,051.5	1,004.6	49.5	7,694.0	14.42099	533.5
2004		5,588.4	1,051.5	1,004.6	49.5	7,694.0	15.86309	485.0
2005		5,588.4	1,051.5	1,004.6	49.5	7,694.0	17.44940	440.9
2006		5,588.4	1,051.5	1,004.6	49.5	7,694.0	19.19434	400.8
2007		5,588.4	1,051.5	1,004.6	49.5	7,694.0	21.11378	364.4
2008		5,588.4	1,051.5	1,004.6	49.5	7,694.0	23.22515	331.3
2009		5,588.4	1,051.5	821.9	40.5	7,502.3	25.54767	293.7
2010		5,588.4	1,051.5	821.9	40.5	7,502.3	28.10244	267.0
2011		5,588.4	1,051.5	821.9	40.5	7,502.3	30.91268	242.7
2012		5,588.4	1,051.5	821.9	40.5	7,502.3	34.00395	220.6
2013		5,588.4	1,051.5	821.9	40.5	7,502.3	37.40434	200.6
2014		5,588.4	1,051.5	821.9	40.5	7,502.3	41.14478	182.3
2015		5,588.4	1,051.5	821.9	40.5	7,502.3	45.25926	165.8
TOTAL	242,910.0							260,843.4

B. Differences in Operating Costs

Although property taxes are a function of the line itself, they are included here because their expense accrues annually. Based on the method described previously (Hutchinson 1974), annual property taxes are estimated to be $7,478,500 and $5,588,400 in Tables 6-15 and 6-16 respectively, on the combined substation and transmission line investment. No property tax is charged against the BPA owned lines. No adjustment for property taxes on differences in generating plant capacity necessitated by line losses or for property taxes on the water supply line is attempted.

A second annual cost is operating and maintenance expenses. Estimates range from .5% to 1% of the original investment. The lower figure of .5% is applied here to both the line and the substation investment.

A third annual expense considered in this analysis is the expense of energy lost in transmission or line losses. The reduction in delivered capacity due to line losses has been considered above as an investment cost; here we are concerned only in the incremental cost of those losses. The figure used in the present analysis will be .3 cents per kw-hr. This is the approximate fuel cost per kw-hr expected for Units 3 and 4. Losses in kw-hr's are estimated at 5% of the average load.

The final expense item considered is the energy cost of pumping water from the Yellowstone River at Nichols to Colstrip, a distance of about 30 miles with a rise of approximately 750 feet in elevation. The MPC estimate of $410,404 (Evans 1974) utilized a $1.71 per kw-hr cost. This analysis will use .3¢ per kw-hr estimate of costs to yield pumping costs of $72,000 per year assuming an 80% load factor.

C. Differences in Timing of Costs

One very great difference between the costs of shipping coal and the costs of construction of transmission lines is the timing of expenditures. If the transmission lines are built, construction is assumed to begin on one line in mid-1975 and be completed in mid-1978. Construction on the second line is assumed to start in mid-1976 and be completed in mid-1979. Cost associated with their operation are likewise assumed to begin in mid-1978 and mid-1979. For the coal shipment alternative, the timing of shipments is the same as the in-service dates for the lines: half-scale shipping from mid-1978 to mid-1979 and full scale shipping after mid-1979. For both the building and the shipping alternative, the load factors are assumed to be the same as those in Table 6-1. Amount of coal shipped, line losses, and pumping costs will vary with load factor.

The technique used to put all of these costs occurring in different time periods on a common basis is to discount payments in the future more heavily than current payments. A payment to be made t years from now is divided by $(1 + r)^t$, where r is called the discount rate. As an example, with a discount rate of 10%, an expenditure of $100 five years hence is divided by $(1.10)^5$, or 1.61051, and the resultant value of $62.09 is referred to as the discounted present cost of that future expenditure. For the compari-

son of the two alternatives being considered, the discounted present values of each will be the basis of comparison. For each alternative, each of the previously determined expenditures will be discounted to the year 1975, and the total discounted value of future expenses for the transmission line estimates will be compared to the total discounted value of the future coal transport expenses. The rate of discount used throughout will be 10% per year. This, at the moment, is an extremely conservative figure, and would not cover even current inflationary changes from one year to the next.

The calculation of the present value of estimated costs are presented in Table 6-15 and 6-16 for building generation at Colstrip and transmitting the load to Spokane. Table 6-17 is the present value calculation of shipping coal to the Spokane area. A comparison of the tables shows that the discounted present value of the estimated coal shipment costs falls between the two estimates for transmission. In terms of cost to the company, the alternatives are quite close. They are summarized here.

Estimate	Discounted Costs	Compared to Coal Shipments
Table 6-14	323.448.1	+$31,900.8
Table 6-15	260,843.4	- 30,703.9
Coal Shipment	291,547.3	

If these costs are spread over the life of the lines they amount to less than $1,000,000 per year.

6.1.4. Cost Comparison Made by the Applicants

Against this background, the Applicant's Environmental Analysis (Westinghouse 1973) calculates that coal shipment from Colstrip to Hot Springs, Montana would cost approximately 10 million dollars more per year than would siting the generating units in Colstrip and sending the power by 500 KV lines to Hot Springs. The analysis carefully accounts for the discrepency between their results and the general conclusions reached in most of the literature on comparative costs. These differences are primarily attributed to three factors (Westinghouse 1973).

1. rail distance to Hot Springs from Colstrip is 30% longer than transmission line distance,

2. BTU content of Colstrip coal is much lower than that used in previous comparisons and

3. rail rates in Montana are higher than those used in previous comparisons (FPC 1970).

These factors dictate against acceptance of the conclusions of past comparative studies without critical examination, and so an attempt has been made to reconstruct the applicants' analysis in order to resolve the differences between that analysis and the results reached in Sections 6.1.2. and 6.1.3. in addition to differences with previous (FPC 1970) studies.

TABLE 6-17

Discounted Present Value of Costs of Shipping Coal From Colstrip to Spokane. Washington. All costs in 1974 Dollars. Discount Rate 10%. Base Year 1975

Thousands of Dollars

Year	Thousands of Tons Shipped	Year 1975 Costs: Cost at $7.35 Per Ton	Discount Denominator $(1.10)^{t-1}$	Discounted to Year 1975
1975			1.0	
1976			1.10	
1977			1.210	
1978	1449.0	10650.2	1.3310	8001.7
1979	4347.0	31950.5	1.46410	21822.6
1980	5796.0	42600.6	1.61051	26451.6
1981	5796.0	42600.6	1.77156	24046.9
1982	5796.0	42600.6	1.94872	21860.8
1983	5796.0	42600.6	2.14359	19873.5
1984	5796.0	42600.6	2.35795	18066.8
1985	5796.0	42600.6	2.59374	16424.4
1986	5796.0	42600.6	2.85312	14931.3
1987	5796.0	42600.6	3.13843	13573.9
1988	5433.8	39938.4	3.45227	11568.7
1989	5433.8	39938.4	3.79750	10517.0
1990	5433.8	39938.4	4.17725	9560.9
1991	5433.8	39938.4	4.59497	8691.8
1992	5433.8	39938.4	5.05447	7901.6
1993	5433.8	39938.4	5.55992	7183.3
1994	5433.8	39938.4	6.11591	6530.2

TABLE 6-17 (cont.)

Discounted Present Value of Costs of Shipping Coal From Colstrip to Spokane, Washington. All costs in 1974 Dollars Discount Rate 10% Base Year 1975

Thousands of Dollars

Year	Thousands of Tons Shipped	Year 1975 Costs: Cost at $7.35 Per Ton	Discount Denominator $(1.10)^{t-1}$	Discounted to Year 1975
1995	4709.3	34613.4	6.72750	5145.1
1996	4709.3	34613.4	7.40025	4677.3
1997	4709.3	34613.4	8.14027	4252.1
1998	4709.3	34613.4	8.95430	3865.6
1999	4709.3	34613.4	9.84973	3514.1
2000	4709.3	34613.4	10.83471	3194.7
2001	4709.3	34613.4	11.91818	2904.3
2002	3984.8	29288.3	13.10999	2234.0
2003	3984.8	29288.3	14.42099	2030.9
2004	3984.8	29288.3	15.86309	1846.3
2005	3984.8	29288.3	17.44940	1678.5
2006	3984.8	29288.3	19.19434	1525.9
2007	3984.8	29288.3	21.11378	1387.2
2008	3984.8	29288.3	23.22515	1261.1
2009	3260.3	23963.2	25.54767	938.0
2010	3260.3	23963.2	28.10244	852.7
2011	3260.3	23963.2	30.91268	775.2
2012	3260.3	23963.2	34.00395	704.7
2013	3260.3	23963.2	37.40434	640.7
2014	3260.3	23963.2	41.14478	582.4
2015	3260.3	23963.2	45.25926	529.5
TOTAL				291547.3

6.1.4.1. Reconstruction of the Applicants' Analysis

In the analysis done for the applicant companies (Westinghouse 1973), coal transport costs were compared to transmission costs from Colstrip to Hot Springs. Table 6-18 is reproduced from that study and is the basis of the comparison. A number of important items in Table 6-18 warrant attention, the first of which is the figure of .00123 dollars transmission costs per kw-hr in 1964 dollars; buried in this figure are such unidentified factors as depreciation rates used, estimated maintenance, taxes, etc. The second crucial multiplier is the escalation factor of 1.536, important both because of its impact on total costs and because it could be adjusted to yield up-to-date 1974 figures. A third factor which merits question is the load factor of 80%. The source of the figure is unclear, but the hypothesized load (1112 MW) certainly does not represent 80% of the capacity of the transmission lines. It appears that the figure of 80% refers to the expected load factor for Units 3 and 4 (The assumption of an 80% generating plant load factor is in itself untenable over the life of the generating units, and as soon as the load factor drops below 80% the corresponding coal tonnages shipped would have to be altered for fair comparison).

A check of the source of background data for Table 6-18 does not provide all the desired information not presented in the cost figures in Table 6-18. However, to set the record straight, it appears that the figures provided by the source have been misinterpreted in the table. Table 6-18 seems to include some serious mistakes. The first and most serious is that the figure of 1.23 mills per kw-hr shown in The National Power Survey (FPC 1964) is an estimate for a single 500 KV line with a capacity of 1000 MW, transmitting an average of 850 MW, establishing an 85% load factor. The Colstrip to Hot Springs transmission line is made up of two parallel 500 KV lines, operating with a combined average load of 1112 MW or 556 MW per line. To correspond to data presented in The National Power Survey (FPC 1964) a load factor of 55.6%, rather than 85%, should be used. The closest comparable data shown there is for a 50% load factor, and the corresponding cost per kw-hr is 1.75 mills. The source of the figures is reproduced here as Figure 6-2.

The second mistake is that the data used in calculating the cost per kw-hr was 1962 data, even though it was published in The National Power Survey (FPC 1964). Thus the escalation factor must use 1962, not 1964, as the base year. In bringing the 1962 figure forward to 1974 (not 1972 as in Table 6-18), an escalation factor of 1.80 (Whitman, Requardt and Associates 1974) has been used. Using these figures, Table 6-18 is recalculated in Table 6-19.

Table 6-19 also recalculates the coal transport costs based upon 1974 estimates made by the Burlington Northern Railroad Company in May 1974 (Sandgren 1974). The rate of $.0095 per ton mile is based upon a Colstrip to Spokane, Washington, routing.

Comparison of the two costs as presented in Table 6-16 shows the two modes of energy transport to be essentially equal. However, it appears

TABLE 6-18

UNCORRECTED COST COMPARISON OF COAL VERSUS ELECTRIC POWER TRANSPORT

Annual Cost of Electric Transmission:

1,390,000	kw Delivered to Hot Springs
x 7008	hr per Year at 80% Load Factor
9,741,120,000	kw-hr
x .00123	Dollars per kw-hr in 1964 Dollars
11,982,000	Dollars (1964)
x 1536	1972/1964 Cost Escalation Factor
$ 18,404,000	Per Year (1972)

Annual Cost of Coal Transport

1,390,000	kw Received at Hot Springs
x 3.0	Efficiency Factor of coal fired plant at 33.3% Efficiency
4,170,000	kw Equivalent Coal Energy
x 3413	Btu per kw-hr
14,232,000,000	Btu per hr
÷ 17,200,000	Btu per Ton at 8600 Btu/lb
827	Tons per hr
x 7008	hr per Year at 80% Load Factor
5,796,000	Tons per Year
x 554	Miles (Length of RR Route)
3,211,000,000	Ton-Miles per year
x .009	Dollars per Ton-Mile
$28,899,000	Per Year

Source: Table 2.91, Applicants' Environmental Analysis, P. 2-155.

TRANSMISSION COST OF RECEIVED POWER
500 KV AC 1000 MW LOAD AT UNITY POWER FACTOR

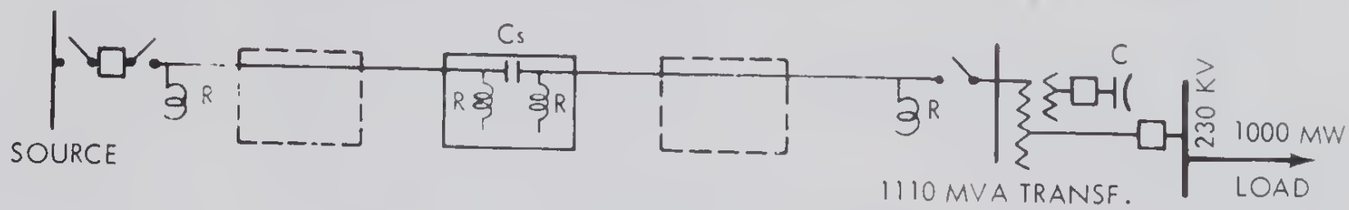

MI LINE	C MVA	SERIES COMPENSATION NUMBER LOCATIONS	CsMVA TOTAL	R MVA* TOTAL	% SERIES COMPENSATION
100					
200					
300	140	1	318	216	45
400	165	2	559	366	57
500	302	2	850	736	67
750	448	5	1596	1210	78
1000	731	7	2632	1920	84

* INCLUDES REACTORS AT TERMINALS

THESE CURVES ARE APPLICABLE ONLY FOR POINT-TO-POINT TRANSMISSION FROM SOURCE TO LOAD AND INCLUDE ONLY COSTS ASSOCIATED WITH THE FACILITIES SHOWN ON THE DIAGRAM ABOVE. THEY ARE NOT TO BE CONSTRUED AS REPRESENTING THE COST OF FIRM TRANSPORTATION OF ENERGY IN ACTUAL POWER SYSTEM OPERATION SINCE NO PROVISION HAS BEEN MADE TO INSURE FIRM TRANSMISSION CONDITIONS.

C REPRESENTS SHUNT CAPACITOR REQUIREMENT OF TRANSMISSION LINE.

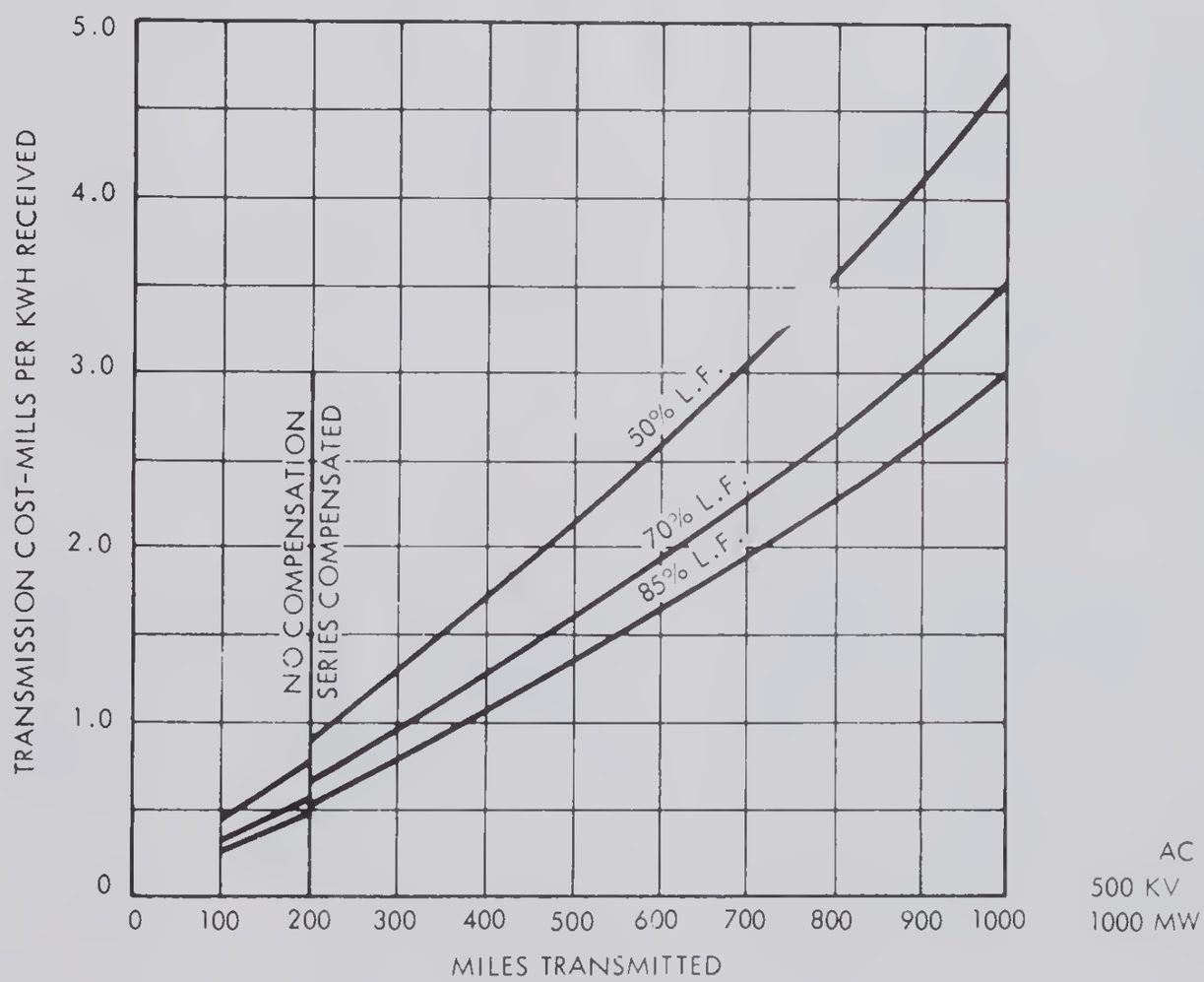

FIGURE 6-2

TABLE 6-19

CORRECTED COST COMPARISON OF COAL VERSUS ELECTRIC POWER TRANSPORT

Annual Cost of Electric Transmission:

1,390,000	kw Delivered to Hot Springs
x 7008	hr per Year at 80% Load Factor
9,741,120,000	kw-hr
x .00175	Dollars per kw-hr in 1964 Dollars
17,046,960	Dollars (1962)
x 1.80	1974/1962 Cost Escalation Factor
$ 30,684,528	Per Year (1974)

Annual Cost of Coal Transport:

1,390,000	kw Received at Hot Springs
x 3.0	Efficiency Factor at 33.3% Efficiency
4,170,000	kw Equivalent Coal Energy
x 3413	Btu per kw-hr
14,232,000,000	Btu per hr
÷ 17,200,000	Btu per Ton at 8600 Btu/lb
827	Tons per hr
x 7008	hr per Year at 80% Load Factor
5,796,000	Tons per Year
x 554	Miles (Length of RR Route)
3,211,000,000	Tons-Miles per Year
x .0095	Dollars per Ton-Mile
$ 30,504,500	Per Year

that the transmission costs are "bare bones" estimates, with no consideration of either the necessary rate of return (see Section 6.1.2.) or differences in the timing(see Section 6.1.3.) of expenditures included. In addition the coal shipment costs are for maximum shipment (80% load factor). Consideration of each of these three points would further inprove the coal shipment position.

6.1.5. Comparative Cost Conclusions

For the three cost comparisons made, the option of shipping coal from Colstrip to either hypothesized location ranges from much cheaper to slightly more expensive than the applicants' proposed option. These comparisons do not include all costs that might be imputed to either course of action, though the major items have been considered. In none of the three cases have environmental effects (aesthetic, biological, chemical, or electrical) been considered. Land taken out of production has entered the calculations only to the extent that the land costs estimated reflect productivity.

The first calculation (Section 6.1.2.) attempted to evaluate the two alternatives in terms of costs to the ultimate consumer of electricity. This is conceptually the best approach. Rail tariffs charged should include taxes and returns to stockholder as well as labor, fuel, and equipment expenditures. Costs of transmission lines likewise should include taxes and a rate of return to the stockholder; they are both real costs of business. Three different estimated transmission capital investment expenditures were used in combination with two different rates of return to stockholders. In each of the resulting six cases, coal shipment provided a substantially cheaper alternative (see Figure 6-1).

The second comparison (Section 6.1.3.), was a comparison of costs to the producer. Expenditures were spread out over the next 40 years in an estimated chronologic sequence. All expenditures were then discounted backward to the year 1975 and totaled for each alternative. In spite of the fact that no return to the applicants' stockholders is included, coal shipment compares favorably (See Tables 6-15, 6-16 and 6-17).

The third calculation (Section 6.1.4.) attempted to retrace the calculations made by the applicants (Westinghouse 1973). After correcting what appears to have been a mistake in interpretation made in that analysis, coal shipment becomes slightly cheaper than electric energy transmission (see Table 6-19). That analysis is in reference to costs to the producer (the utility) and not to the customer; there is no rate of return included. It also ignores differences in the timing of expenditures. Another major flaw is that the comparison is based on maximum coal shipment (80% load factor on plants) and therefore overstates coal shipment costs.

Beyond these dollar cost figures there is another advantage to coal shipment; that advantage is reliability.

One strong disadvantage of electric energy as compared to fossil fuels is that it is difficult to store electric energy. Production

must follow the fluctuations of demand through time. Coal can be, and is stored at power plants for lengthy periods of time. For example, there will be a 90-day supply of coal stockpiled at the generating site in Colstrip. The same would be true if built at any other site. This means that the rail shipment could be disrupted between the mine and the generating plant for up to 90 days without affecting the capability of the station to supply the load. As compared to this, simultaneous breakdown of both transmission lines (landslides, etc.) would mean instantaneous loss of load.

6.2. Beyond Comparison of Costs; The Possibility of Coal Shipment and Impacts.

In the above sections, cost comparisons showed coal shipment to be an economically viable alternative when compared with transmission lines. This section takes a more detailed look at additional aspects of coal shipment. A destination in the Spokane area is assumed as an example.

The Colstrip proposal projects the delivery of 1390 megawatts of peak power to west coast utilities. As an alternative, an equivalent amount of coal could be delivered via existing Burlington Northern tracks. The previous sections of this chapter have shown economic feasibility. The rail shipment of coal would also export many of the environmental side effects stemming from the generation and transmission of electricity. It is estimated that a maximum of 5,800,000 tons of coal would have to be shipped annually to generate the amount of power equivalent to Units 3 and 4 at the load center.

Coal shipments of this magnitude, over a long period of time, would take place on unit trains--a train that "carries one commodity from origin to destination in a continuous cycle, slowing down for loading and unloading and stopping only for fueling and inspection" (Welty 1973, p.22). Unit trains are a relatively recent innovation in railroad technology. Prior to passage of the National Transportation Act in 1958, rail tariffs on large multi-car shipments of coal and other goods could not be less than 85% of single-car rates. Since that time the economies of scale which result from unit train shipments have allowed railroads to reduce freight rates considerably on unit train routes. These economies stem largely from efficient utilization of equipment, almost no need for switching, and the routinization of scheduling, maintenance, and inspection.

Unit trains typically require heavy duty power units and use large capacity freight cars. Because of this, the capital costs for unit train equipment are larger than for ordinary rolling stock. In return, the equipment has a more productive lifetime than other equipment. For example, the power units required for unit train use are 3600 H.P. special duty diesels costing $435,000 each, compared to the 3000 H.P. ordinary diesels costing $350,000 each./3 Coal cars are larger too: a new unit train operated by the Black Mesa and Lake Powell Railroad is equipped with 122-ton hoppers rather than the more usual 100-ton cars. The cars are designed with electrically operated bottom-dump doors which allow

completely automatic unloading of each car in less than 15 seconds. The special design means the hoppers cost $40,000 each (O'Connell 1974). Thus, unit trains are larger and more automated than mixed trains.

Because of intense use and heavy loads, unit trains and track surfaces subject to unit train use require more maintenance than is customary. The Burlington Northern reported in 1973 that

> track surfaces deteriorate under the heavy loading, necessitating more frequent surface correction. Superelevation on curves must be maintained at the equilibrium elevation for the actual train-speeds achieved. Rail anchors must be maintained and patterns increased to resist rail creepage. Joints must be kept tight and properly supported to prevent advance of rail defects within the joint area. Subgrade defects, such as slides and sinkholes, must be treated and eliminated because heavy unit trains activate and magnify these difficulties (Welty 1973, p.26).

To cope with these problems, as well as accelerated wear on couplers, wheels, and other parts, regular scheduled maintenance is necessary.

Burlington Northern (Davies 1974) has furnished information on the type and frequency of trains required to ship Colstrip coal west to utilities in Washington state (vicinity of Spokane), based on six million tons per year. The maximum grade on the westbound route is 2.2%. As a result, a train with six diesel-powered units is limited to a total weight of 7,200 tons by American Association of Railroads regulations. Fully loaded, this would mean a 55 car train with 129-ton hoppers. To move six million tons per year would require 1091 trainloads, each with a five-day turnaround time. These figures translate into three trains a day or fifteen trains of equipment in constant operation.

If all of the equipment for this operation were newly purchased, it would involve a minimum capital outlay of $72 million:

6 engines/train x 15 trains	= 90 engines	
@$435,000 each		$39,150,000
55 cars/train x 15 trains	= 825 cars	
@$ 40,000 each		$33,000,000
	TOTAL	$72,150,000

By utilizing existing equipment, Burlington Northern estimates a total capital outlay of $36 million would be necessary. The diesel equipment has an expected life of 20 years (Gustafson 1974); after that period the engines may be rebuilt for about one-third of the original capital cost (Tomco 1974). The hoppers also have an expected life of 20 years, although they are generally depreciated over a 14-year period (O'Connell 1974).

Delivery dates vary: the Ford Motor Corporation reports an 18-month waiting period for new hoppers with delivery following at a rate of one car per day. General Motors estimates a 15-month delivery date for special-duty diesel engines. Both firms feel they can handle orders of the above magnitude in these periods. Thus, the rolling stock could be available for large scale

movement of coal by mid-1977.

The unit train movement would represent a comparatively large new demand for diesel fuel. Each train would require 24,000 gallons per round trip. For 1091 trips per year, about 26.2 million gallons of diesel fuel would be required.

The additional employment associated with 15 trains of equipment was estimated by Burlington Northern as shown in Table 6-20.

TABLE 6-20

ADDITIONAL BURLINGTON NORTHERN EMPLOYMENT REQUIRED FOR UNIT TRAIN OPERATIONS

Job Description	Number of Employees	Annual Salary	Annual Wage Bill
Maintenance of Way	34	$12,000	$ 408,000
Car Department	60	12,000	720,000
Locomotive Department	65	12,000	780,000
Operating & Clerical	6	12,000	72,000
Enginemen	33	22,000	726,000
Trainmen	99	17,000	1,683,000
Vacation Relief and Contingencies	45	15,000	675,000
Total Employment	342		5,064,000

Not all of these employees would reside in Montana. If it is assumed that the residence of employees is proportional to the number of track miles in each state, then about 28% of these employees would reside outside Montana--an estimate which is probably on the high side. Seventy-two percent of the 342 employees, or 246 persons, would be residents of Montana.

In addition to income taxes paid to the state by these employees, Burlington Northern would pay state property taxes on the general system improvement resulting from the capital outlay used for the unit train rolling stock, and federal and state taxes on the additional profit resulting from the unit train operations.

The estimate of 246 in-state, long-term jobs compares very favorably with the prediction of 95 generating station jobs created by the operation of Units 3 and 4. These numbers both represent primary jobs and would create additional secondary employment. The employment that would be lost to the state would be the four years of construction jobs necessary to build Units 3 and 4, the transmission lines, and the related secondary employment associated with the construction.

This assumes that the units would be built in the Spokane area, and of course there is no guarantee that will occur. It is an alternative location if the power from Units 3 and 4 is needed in the Northwest.

If comparable units were not built in the Northwest, then impacts are less certain. Given the impetus to mine western coal and the bouyant present market for coal, the coal will be mined. If shipped east the employment impacts on Montana labor of shipping would not be as great as westbound shipments, however the number of jobs created might approach the 95 jobs created to operate Units 3 and 4.

FOOTNOTES

CHAPTER SIX

1. Cost of shipping is computed from Table 6-13.

2. To be correct, the difference between double wood pole 230 KV lines and a 500 KV line from Colstrip to Broadview should be added to the cost.

3. Prices are for General Motors SD 45-2, - $435,000; GP 40-2, $350,000, (Gustafson 1974).

CHAPTER SEVEN Power Plant System Alternatives

7.1. Alternative Plant Technologies

7.1.1. Alternative Cooling Systems

Cooling systems are necessary to cool the expanded steam in the condenser and return it to liquid form. This requires large flows of cooling water through the condenser. This section describes in detail many of the systems used for cooling and heat rejection.

7.1.1.1. Once Through Cooling

Once through cooling is the most common method for removal of heat from power plant condensers in the United States and is shown schematically in Figure 7-1. In this system, cool water is drawn from a natural source of water and circulated through the power station condenser tubes where it picks up the latent heat of the steam condensing on the outer surface of the tubes. The warmed water is then discharged to the river at a point where recirculation of the warm water will not occur. No attempt at cooling the warm water prior to discharge is made, in contrast to other cooling techniques.

Until the current concern about thermal pollution became manifest, the availability of large supplies of cooling water were a prime requirement for large power plant locations. The overwhelming majority of plants used this cooling technique, and little effort was devoted to limiting the temperature rise in the receiving water. However, it is now recognized that to maintain environmental impact within an acceptable level the temperature rise of the cooling water must be limited and that a large portion of the water should not be diverted to meet cooling requirements.

Once through cooling is the least expensive cooling method, provided a suitable site can be found. Capital, installation, operating, and maintenance costs are low. However, various forms of aquatic life are forced through the condenser tubes, often resulting in high mortality rates, and the discharged water is somewhat warmer than the inlet. This sudden change in temperature upsets the ecology of the water, lowers the oxygen content, increases the metabolic rate of the fish, and enhances growth of undesirable bacteria. The water must move a considerable distance downstream before its temperature returns to normal.

In the Colstrip region, the Yellowstone River is the only body of water which could qualify as both source and heat sink for run of the river cooling water requirements. A run of the river cooling system at Colstrip would require two separate water lines and capacity to pump the river water approximately 60 miles from the river, to the power plant, and back to the river.

The circulating water flow rate for condenser cooling water for each of the two 700 megawatt units is about 220,000 gallons per minute (gpm) or 491 cfs. For four units having a combined capacity of 2060 megawatts, a total of about 660,000 gpm or 1473 cfs would be required, and this amount is equal to approximately 15% of the average flow of the Yellowstone River

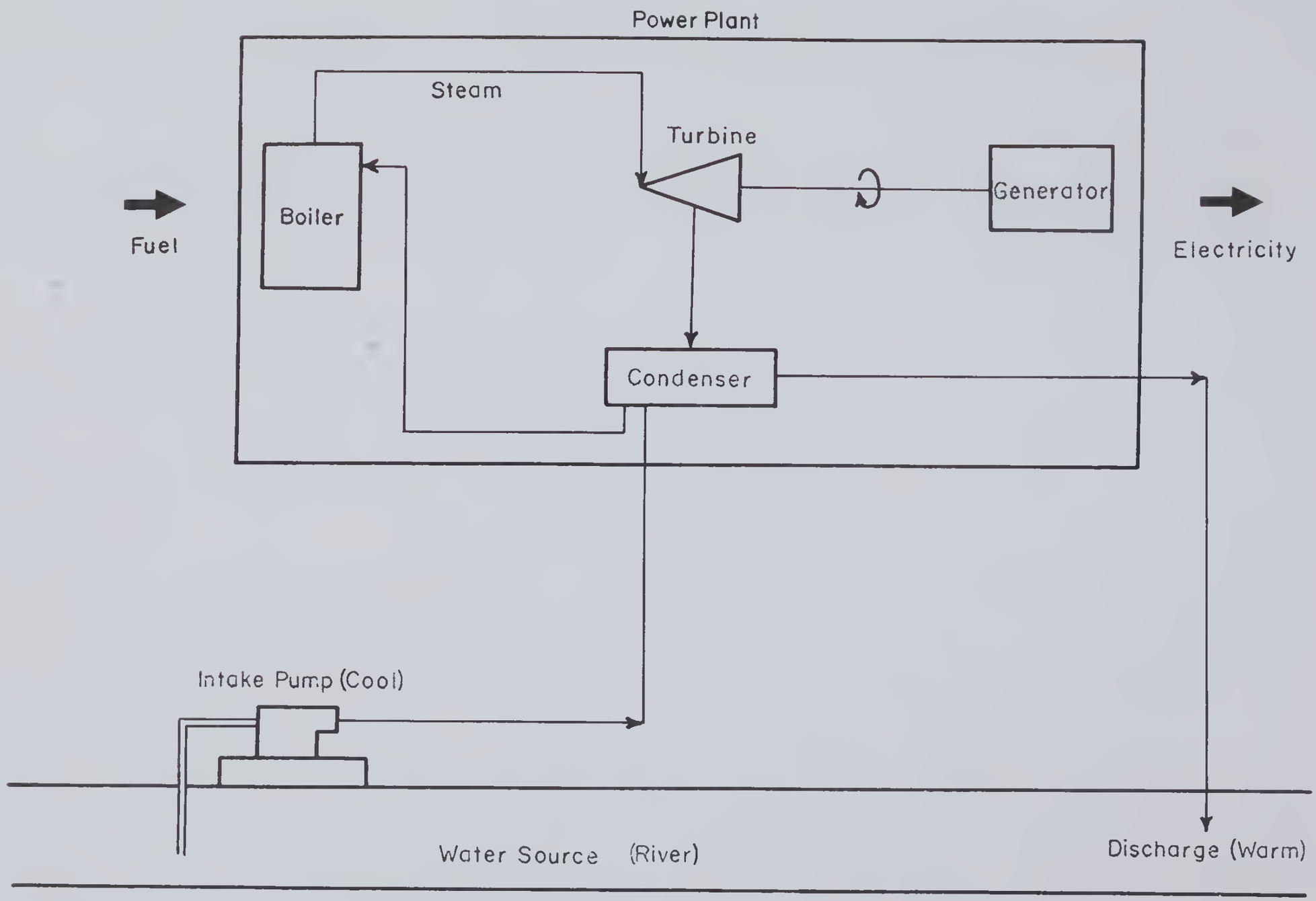

FIGURE 7-1 ONCE THROUGH COOLING

at Nichols and over 98% of the three-day low flow. However, it has been established by the Committee on Power Plant Siting of the National Academy of Engineering (1972) that plants sited on large streams and using run of the river cooling should not use more than 20% of the low water flow of the stream. Based on that restriction, a water flow of only 300 cfs would be available to the condensers. Such a low flow rate would dictate that the intake water temperature be increased over 150°F in the condenser to meet the plant cooling requirements. The discharge water temperature would thus be near the boiling point, a situation unacceptable from an ecological standpoint.

From the discussion in the foregoing paragraphs it may be concluded, both on the basis of water availability and possible adverse environmental impact, that the once through cooling method is not a viable alternative for the Colstrip complex. Instead, it would be necessary to reuse water from a closed cycle; water would be heated in passage through the condenser, cooled by some heat extraction process, and then returned to the condenser. Then only enough water would have to be extracted from the Yellowstone River to make up for evaporation losses, leakage, etc.

7.1.1.2. Cooling Pond

A cooling pond (shown schematically in Figure 7-2) is one alternative for heat dissipation in a closed-loop process. In this system, heated water from the condenser is discharged into one side of an existing natural lake or pond or of a pond specifically created for power plant cooling. Here, it usually mixes to some extent with the receiving water and drops in temperature. The mixed water then proceeds through the pond, transferring heat from the pond's surface to the atmosphere by evaporation, convection, and radiation. Cooling capacity must be sufficient to insure satisfactory condenser intake temperatures.

Three classes of cooling ponds are defined: (1) completely mixed ponds, (2) flow-through ponds, and (3) internally circulating ponds. A completely mixed pond is one in which the pond temperature is almost uniform except in a small region near the plant discharge. Typically this temperature is just a few degrees above the equilibrium temperature. In a flow-through pond the temperature decreases away from the plant discharge. In some cases the pond discharge is returned to a stream or estuary to satisfy local temperature regulations. More commonly, the plant intake is located at the low temperature end of the pond. An internally circulating pond exhibits a flow pattern in which the warm plant discharge flows on the surface of the pond while the cooled water returns to the plant intake by flowing under the warm layer.

Regardless of the type of pond, heat losses to the atmosphere are a function of the pond's surface temperature, air temperature, relative humidity, wind speed, solar radiation, atmospheric radiation, silting of the pond, aquatic growth, and erosion. The pond reaches steady state when surface heat loss balances the heat input due to natural causes plus the waste heat.

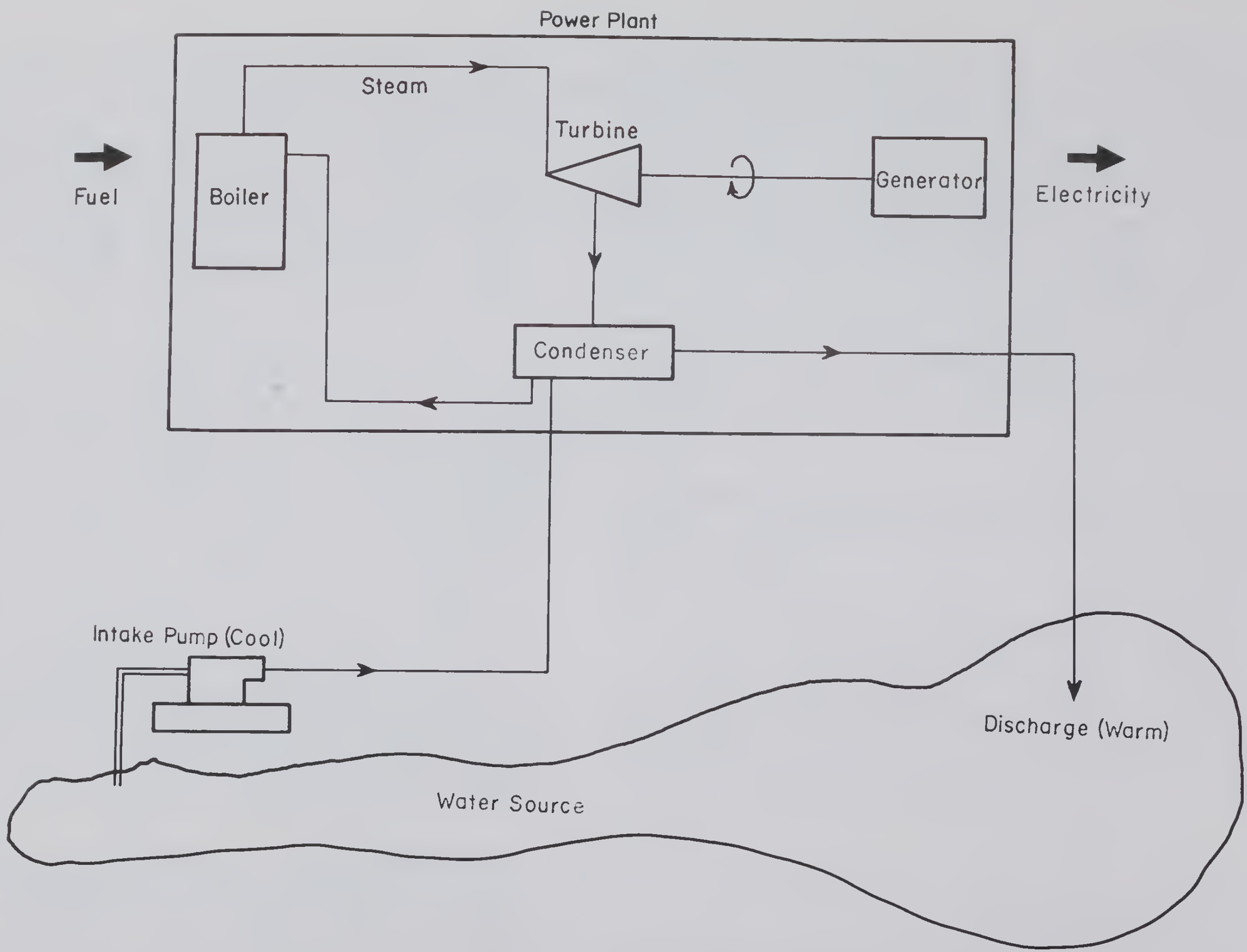

FIGURE 7-2 COOLING POND

The natural thermal cycles of bodies of water are described in detail by Hutchinson (1957). The thermal properties of lakes vary with latitude, altitude, and depth of the basin. In the temperate zone most lakes are dimictic; i.e., they are freely circulating twice a year, in spring and autumn, and are inversely stratified in winter and directly stratified in summer.

The layout and cooling effectiveness of cooling ponds is determined by topography, available land, and ease of construction at a given site. They may be constructed quite simply by building an earthen dike or a small dam, if an existing lake or reservoir is not available. Such ponds may be operated for extended periods of time without makeup water and may serve as retention basins. Unfortunately, they also have relatively low heat transfer rates, thereby requiring large surface areas. They concentrate dissolved solids, thereby requiring blowdown, and collect impurities since large surfaces are open to the atmosphere.

Water loss from a closed-cycle cooling pond results from natural and forced evaporation, seepage, blowdown losses, etc. Loss due to forced evaporation depends primarily on wind and water temperature, and this parameter usually accounts for the major portion of the water heat load. The remaining waste heat is dissipated from the surface by convection and long wavelength radiation.

Water consumption due to surface evaporation is attributable to both natural evaporation and dissipation of the plant heat load. In an existing pond used for cooling purposes, natural evaporation would occur regardless of plant operation, but water consumption would be increased due to the plant heat load. If, however, the pond utilized is not a previously existing pond, then the normal evaporation losses must be added to the heat induced losses; i.e., all losses would be attributable to the operation of the power plant.

A major disadvantage of cooling ponds is the large amount of land required, normally one to two acres per megawatt. Even efficient ponds in regions of relatively low humidity require about 0.75 acres per megawatt. If land is available at a reasonable price, however, the cooling pond offers such advantages as simplicity, low maintenance, recreational value, ability to operate for extended periods without makeup water, low power requirements, and, most important, high thermal inertia. High thermal inertia means that in a properly designed pond the temperature of the intake water will not reflect short term changes in meteorological conditions or plant loadings. The cooling pond is an aesthetically pleasing cooling alternative. Although fogging may occur downwind of the pond on cold days, this is usually not as great a problem as with evaporative cooling towers. Typically the limit of the affected area downwind of the pond is several hundred feet. However, this figure may increase substantially with an increase in the pond's size and heat load.

If the cooling pond is to be a viable cooling alternative, a suitable site for location and construction must be available. The site must provide a location for the dam and pond containment situated appropriately for the plant

condensers. The effective pond surface area must be adequate for heat loss dissipation. If there is a large portion of ineffective heat transfer surface, the pond may not provide adequate heat transfer. In addition, the pond's configuration should permit the warm circulating water to reach all areas of the pond to maximize heat dissipation and minimize the short-circuiting of warm water.

Several potential sites were considered by Westinghouse for a cooling pond at Colstrip. The largest possible lake within the sites considered would have a 1300 acre surface area. The exact location of these sites was not disclosed by Westinghouse. Depending on location, considerable construction work would be required to erect the necessary dam and compact the embankments' silty clay overburden. Because of the irregular terrain, long fingers would extend from the lake, significantly detracting from the effective cooling area. In addition, the most suitable sites for damming a watershed to create a pond are several miles from the plant site. The condenser cooling water would have to be pumped that distance to the lake and back to the plant, crossing the highway enroute and requiring large quantities of pumping power.

The water consumption would be approximately the same as with the proposed evaporative cooling system and would have to be pumped from the Yellowstone River. However, as indicated previously, when a pond is constructed specifically for cooling purposes, normal evaporative losses must be attributed to the system, and water consumption may be greater than in evaporative cooling towers.

One of the major incentives for considering a cooling pond is its potential for lower temperature water returning to the condenser. An approach as low as 3 to 4°F is possible in ponds of reasonable size and deep cooling ponds can provide water at even colder temperatures at times during the year. For a well-designed flow-through pond in the Colstrip area, water cooler than the design cold water temperature of 81.5°F could be provided at the appropriate flow rate to the condensers. However, a viable biological community within the pond would not be possible since the temperature of much of the pond would exceed 85°F.

Another problem with cooling ponds is caused by the extremely cold temperature of the ambient air in the winter. Heat dissipation from the pond surface is drastically reduced by surface icing. Even at 0.75 acres per megawatt, with a heavy thermal load, freezing could occur if the plant were to shut down. In average January temperatures of less than 10°F, the pond would have a discharge temperature of about 50°F. Following a plant shutdown in this weather, icing of the pond's surface could be expected to begin within 2.5 days, although density-induced mixing by natural convection would initially delay surface icing. Shutdown of some plant units would not create a problem, but if the thermal load on the cooling pond were totally disrupted, e.g., by a break in the cooling water pipeline, freezing would soon begin, and the cooling pond would be out of operation.

7.1.1.3. Spray Ponds

Spray ponds operate on the same principle as cooling ponds. However, the evaporation resulting from exposure to the air is enhanced by spraying the warm water into the air over the pond. Residence time in the air is thus increased as is the relative velocity between the water droplets and the air. The spray nozzles are usually 5 to 10 feet above the surface of the pond. This type of system is shown in Figure 7-3.

The designs which have been evaluated to date suggest that the land required for a spray pond is only about five percent of that required for a cooling pond. Also, the economics of a spray pond have been shown to be comparable to those of a mechanical draft evaporative cooling tower system (see Section 7.1.1.5.) for relatively small size installations. The spray pond does have some unique problems, however. For efficient evaporative cooling, the water spray must be in contact with cool, dry ambient air, but as the size of the pond increases, the air passing by the sprays is already saturated, so the sprays on the downwind side are not very effective. The spray modules must be located to provide for proper water distribution without interference with adjacent modules. Studies of existing small-scale units also indicate that the water spray can drift quite severely beyond the site, although this may be reduced to some extent by the use of lowered fences. Such drift does increase the probability of fog and icing, affecting highway and rail traffic in the vicinity of the spray pond, as well as nearby recreational facilities.

Operating experience with spray ponds at power stations larger than 250 megawatts is extremely limited. A major problem has proved to be fouling of the spray equipment. For this reason alone, continuous operation of spray cooling units using water with high solids content would not be feasible.

Spray units could be used to provide part-time supplemental cooling for a conventional cooling pond system. That is, a pond with high thermal loading could be used without spray cooling during the cool periods. Such high thermal loading would minimize potential freezing problems during winter. Then, during hot periods when the pond could not possibly dissipate the heat rejected by the condenser to the cooling water, sufficient supplemental spray cooling could be provided to reduce the thermal loading on the pond to reasonable levels.

As an example, a cooling pond with a complete heat load rejection capability for atmospheric enthalpy conditions which do not exceed the equivalent of 60°F and 40% relative humidity has been considered. For the Colstrip location, this would cover about 75% of the total hours of the year including most of the summer period. During summer afternoons when these atmospheric conditions are likely to be exceeded, supplemental sprays could be used to reflect the excess heat load. During the hottest summer weather, approximately 50 spray units above a 2000-foot-long canal leading into the pond would reject approximately half the heat, and the pond would reject the remaining heat load. The hot water temperature from the condenser would be about 95°F, and the cold water discharged from the lake

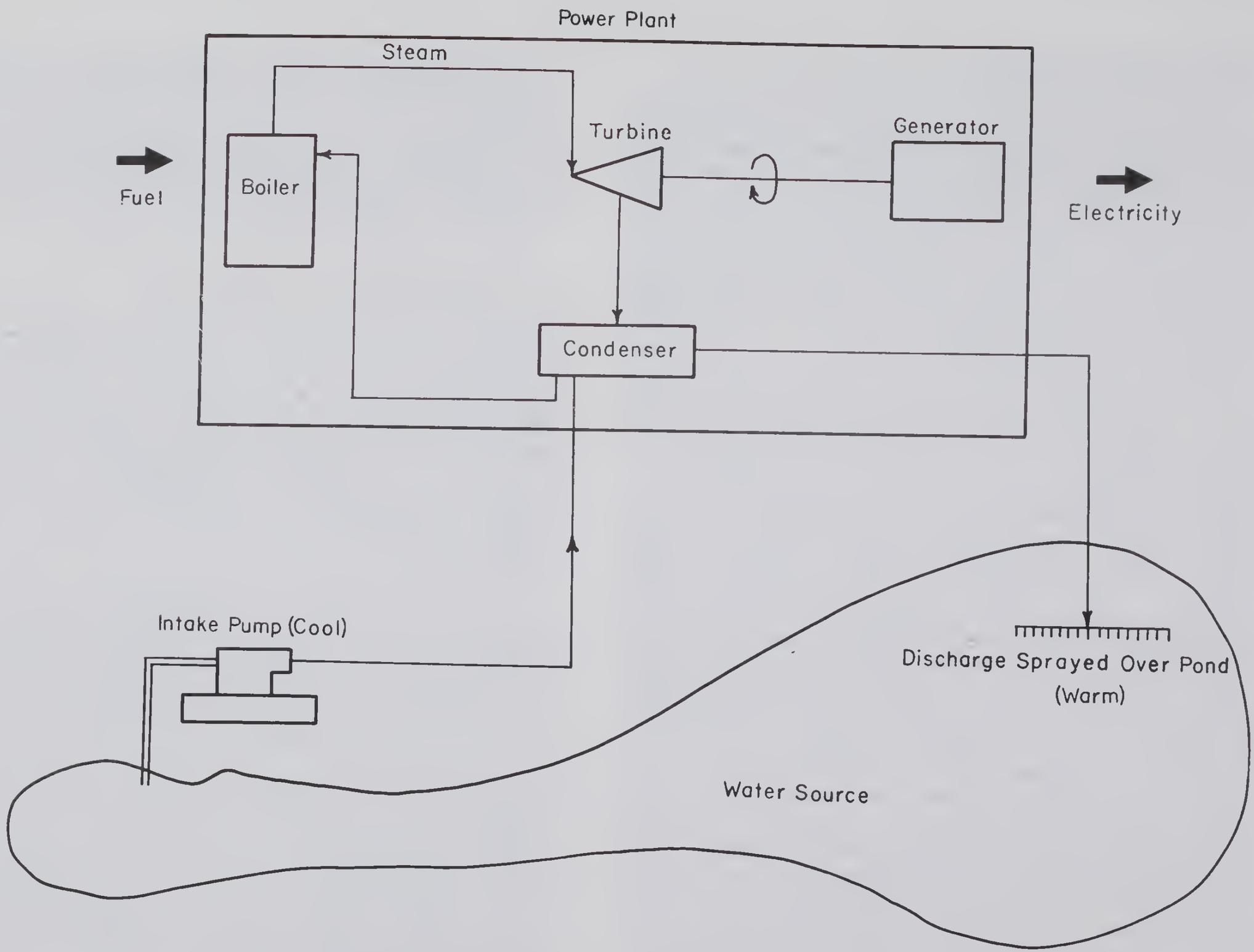

FIGURE 7–3 SPRAY POND

would be about 73°F. Under such conditions a viable aquatic community still would probably not be able to exist in the pond.

The spray-supplemented cooling pond is a technically feasible alternative to a cooling pond. However, the same site problems exist as for the cooling pond alternative. Construction of the pond and spray canal and spray units would require significant capital investments. Evaporation losses and make-up water are expected to be of the same order as the proposed evaporative system, and drift losses may be significantly larger. In addition, this type of system is completely untested for the capacity installation under consideration for Colstrip.

7.1.1.4. Natural Draft Evaporative Cooling Tower

An evaporative or wet cooling tower is a device which cools water by bringing the water into contact with air. The water and air flows are directed in such a way as to provide maximum heat transfer. The heat is transferred to the air primarily by evaporation, while the remainder is accomplished by sensible heating. Several factors, other than enthalpy and temperature differences, affect the rate of heat transfer. First, the interfacial area between the water and air is an important parameter. Packing is commonly used to break the water up into smaller droplets which evaporate more easily (splash type packing) or provide more surface area upon which to develop liquid films (film type packing). A second important parameter is the relative velocity between the air and the water. Higher velocities allow more heat to be carried away in a given amount of time. Finally, the residence time of the air in the heat transfer section of the tower is important. Sufficient packing height must be provided so that the air leaving the tower will be saturated.

A natural draft cooling tower is designed so that the movement of air through these towers is a natural draft due to a difference in density between the inlet and exit air streams. (This type of cooling system is shown in Figure 7-4.) That is, the air outside the tower has a slightly greater density (on the order of 0.05 lb / ft^3) than the air inside the tower above the packing. The difference in hydrostatic pressure between two columns of air of equal height, one inside the tower and the other outside, drives the air through the packing and up the tower. The driving potential is directly proportional to the density difference and the height of the columns. Air drawn through the tower is contacted with the condenser water, which is continually redistributed into fine droplets while falling through the tower packing to provide a large air-water surface contacting area. Heat is transferred from the water to the air by convective transport of sensible heat and by evaporation. All heat transfer occurs as a result of direct contact between the naturally drafted air and the recirculating condenser cooling water.

Because much of the cooling in a wet cooling tower is achieved by evaporation of a portion of the water, the exit air stream is both warmed and virtually saturated with water vapor. When this stream leaves the tower and mixes with the

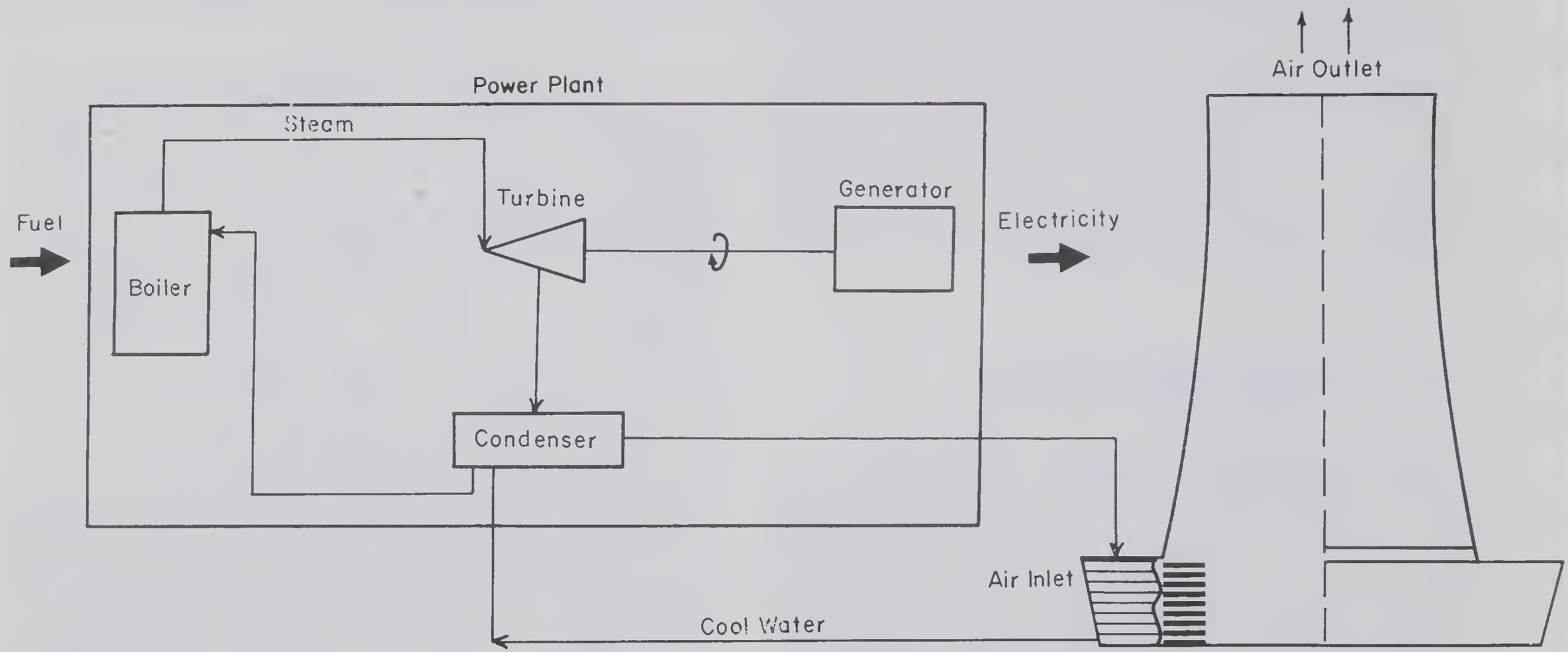

FIGURE 7-4 NATURAL DRAFT EVAPORATIVE COOLING TOWER

atmosphere, the excess moisture in the air condenses to form a plume under many atmospheric conditions. In addition to this plume, droplets of water can be blown out of the tower, adding to tower water losses. This is known as drifting.

These towers are built as high as possible to achieve the greatest air flow. Some natural draft towers are as tall as 500 feet, and base diameters almost equal the heights. These towers are normally hyperbolic in shape due to aerodynamic and structural considerations. Also, substantially less material is required for the hyperboloid shape than for an equivalent straight cylindrical tower. These large structures can be an aesthetic intrusion and must be designed to withstand local winds. Also, because of the tower dimensions, a single plume is expelled from each tower, occurring well above ground level. Although the massive structure is very expensive to construct, its operating costs are relatively low since natural forces are used to move the air.

Natural draft cooling tower performance is a function of the inlet wet bulb temperature and relative humidity. The density difference or driving force decreases as the inlet wet bulb temperature increases at constant relative humidity. Conversely, the density difference or driving force increases as the relative humidity increases at constant wet bulb temperature. Therefore the volume of air that passes through the tower is dependent upon atmospheric conditions. Design point for these towers is nearly always based on a "worst" set of atmospheric conditions. Somewhat oversized towers result if satisfactory operation under adverse conditions is to be assured.

Water consumption with natural draft evaporative cooling towers would be about the same as with the proposed mechanical draft evaporative towers. The water consumed would have to be made-up by pumping from the Yellowstone.

Temperatures in the tower tend to be greater than might otherwise be desirable because the air must be warmed to induce drafting. Inlet hot water temperature must be kept hotter than the air dry bulb temperature. Under certain atmospheric conditions, the result may be reduced cooling and a corresponding decrease in the turbine generator performance, since the higher temperature of the water returned to the condenser causes the condenser's back pressure to increase. Exact control of outlet water temperature from the tower is also difficult to achieve, and this can adversely affect plant operation.

Natural draft towers have been used in Europe since 1907, but only recently have any been built in the United States. The first natural draft tower was built in the United States in late 1962 at the Big Sandy Plant of the Kentucky Power Company. Possibly the lack of natural draft towers in the United States was due to the fact that they appear, in general, to be best suited economically for areas with high humidities. Such areas usually have abundant water supplies and loose temperature rise restrictions.

Since 1962 the natural draft cooling tower has been developed as an effective method for meeting heat dissipation requirements. The natural draft evaporative cooling system is a possible cooling alternative for the Colstrip

complex. Adequate cooling could probably be obtained with three towers. One tower should be sufficient for the two 350 megawatt units, and one tower would be required for each of the 700 megawatt units. All of these towers would have base and top diameters of about 280 and 140 feet, respectively, and heights of about 275 feet.

7.1.1.5. Mechanical Draft Evaporative Cooling Towers

As in the natural draft tower, cooling in the mechanical draft tower is achieved by bringing water into direct contact with air flowing through the tower. Heat is transferred to the air primarily by evaporation, although some sensible heating of the air is also involved. The air flow in a mechanical draft tower is produced by a fan which may be placed at either the inlet (forced draft) or the exit (induced draft) of the tower. (This system is shown in Figure 7-5). The air flow rate can thus be controlled to satisfy off-design cooling requirements. The use of the fan also means that the great height of the natural draft unit is not necessary. Large mechanical draft units are usually 60 to 80 feet tall. The mechanical draft cooling tower can thus be built in a relatively compact and standardized manner.

Forced air flow towers have some very significant advantages over induced flow towers. Fewer vibrational problems are encountered since the fans are located at the air intakes and at lower levels on the tower. Since the fans contact the drier, ambient air rather than the warm, moist exit air, less corrosion occurs. Noise levels are lower since the tower itself serves as a muffler. Since some of the velocity pressure is extracted as useful work, the forced flow tower is slightly more efficient.

Even though forced air flow towers would seem to have overwhelming advantages over induced flow towers, their drawbacks are even greater. Recirculation of the warmed, moist air to the air intakes of the tower is greater than with induced air flow, and this results in a significant degradation in tower performance. Uniform air distribution through the forced air draft tower is very difficult to obtain in large size towers. Fan size, compared to that utilized in induced flow towers, is limited. Consequently, induced draft towers are generally favored over forced draft towers, and further consideration will be limited to the induced flow tower.

Like the natural draft cooling tower, the mechanical draft evaporative cooling tower consumes large volumes of water, creates a plume, and has drifting of water droplets. Its lower construction cost makes it less expensive initially, but the power needed to drive the fans significantly increases operational costs. Individual plumes created from each fan cell are exhausted 60 to 80 feet above ground level, creating a reasonable potential for localized ground fogging. Since the air flow is mechanically controlled, greater cooling efficiency can be achieved under a variety of meteorological conditions, allowing higher power generation than with the natural draft tower. The mechanical draft evaporative cooling tower is an effective, well-established, and versatile cooling system.

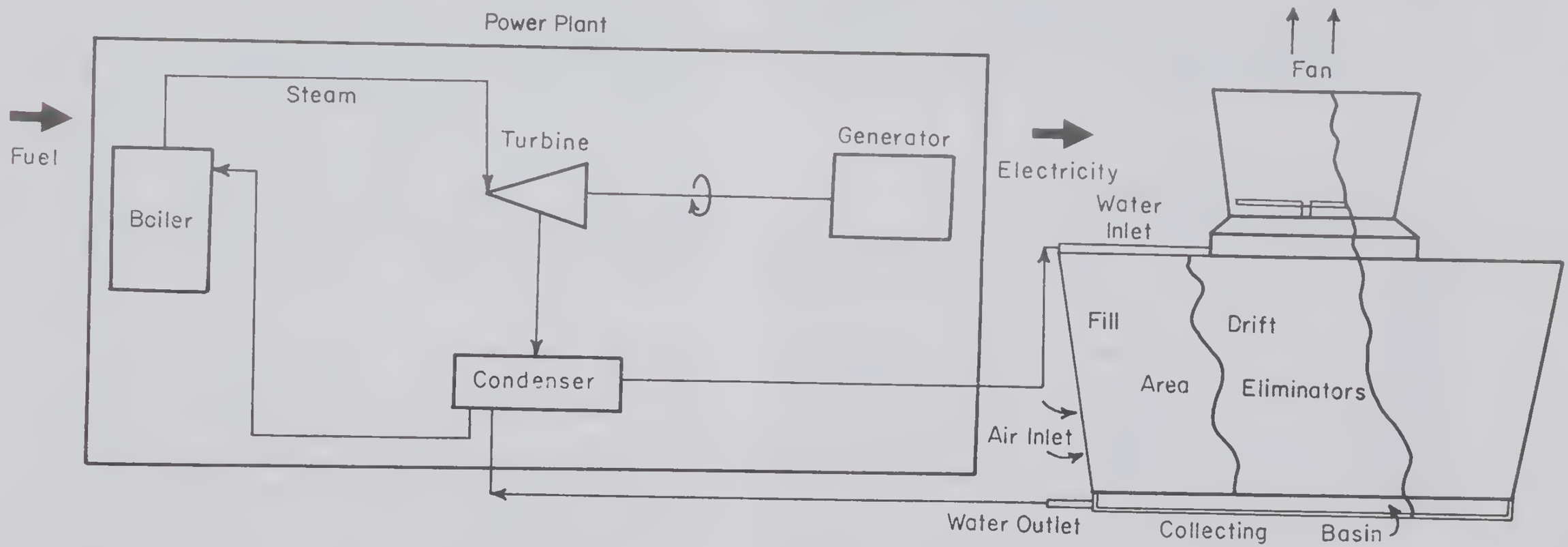

FIGURE 7-5 MECHANICAL DRAFT EVAPORATIVE COOLING TOWER

For the Colstrip complex, adequate cooling would be provided by using one mechanical draft evaporative tower for each of the four generating units. The towers for Units 1 and 2 would each contain seven cells and have overall horizontal dimensions of about 66 feet by 253 feet. The towers for Units 3 and 4 would each contain 15 cells and have overall dimensions of about 66 feet by 541 feet. The height of each tower would be approximately 63 feet.

7.1.1.6. Dry Cooling Tower

Though air cooling has been used for many years for industrial cooling in the petroleum industry and in automobiles, it was only with the relatively recent work of Heller and Fargo (1956,1962) that the theory advanced sufficiently to permit larger scale application to central station electrical generation. Dry cooling towers dissipate heat by conduction and convection. Two types of systems have been employed, indirect dry cooling and direct dry cooling.

In the indirect dry cooling tower, hot water from the plant's condensers is pumped through banks of finned tube heat exchanger surfaces similar to an automobile radiator. This system is shown schematically in Figure 7-6. The heat in the water is transferred by conduction to the metal walls of the tubing, then by convection to air which flows up through the cooling tower, past the tube surfaces, and out of the tower. Since the water and air do not come into direct contact, water is not lost by evaporation. Because the heat transfer does not include the latent heat of evaporation, dry cooling towers require both greater air flows and larger air temperature increases in order to dissipate the same amount of heat as a comparable evaporative cooling system.

Two types of systems may be employed with indirect dry cooling. First, a dry cooling unit may simply be substituted for an evaporative cooling unit in a conventional design. Second, the indirect dry cooling tower is usually employed as a component of the "Heller System". In this system, the turbine exhaust is condensed in a direct contact spray condenser. A portion of the condensate flows to the boiler, while the remainder is pumped through the dry cooling tower in a closed loop, returning to the condenser.

The second type of dry cooling is termed direct dry cooling. In this scheme the turbine exhaust steam is condensed directly in the air-cooled heat exchangers. Extremely large steam headers are required, and the cooling towers must be located immediately adjacent to the low pressure turbine stages in order to reduce header cost and increase engineering efficiency. This tends to restrict the use of direct dry cooling for very large power plants. Consequently, the remainder of this discussion will concentrate on indirect dry cooling.

Where evaporative towers rely on an overall enthalpy driving force between water and air to transfer heat between phases, dry towers rely on a temperature driving force between the water inside the tubes and the air flowing outside. Therefore, the dry bulb temperature of the air is the theoretical limit of cooling which can be

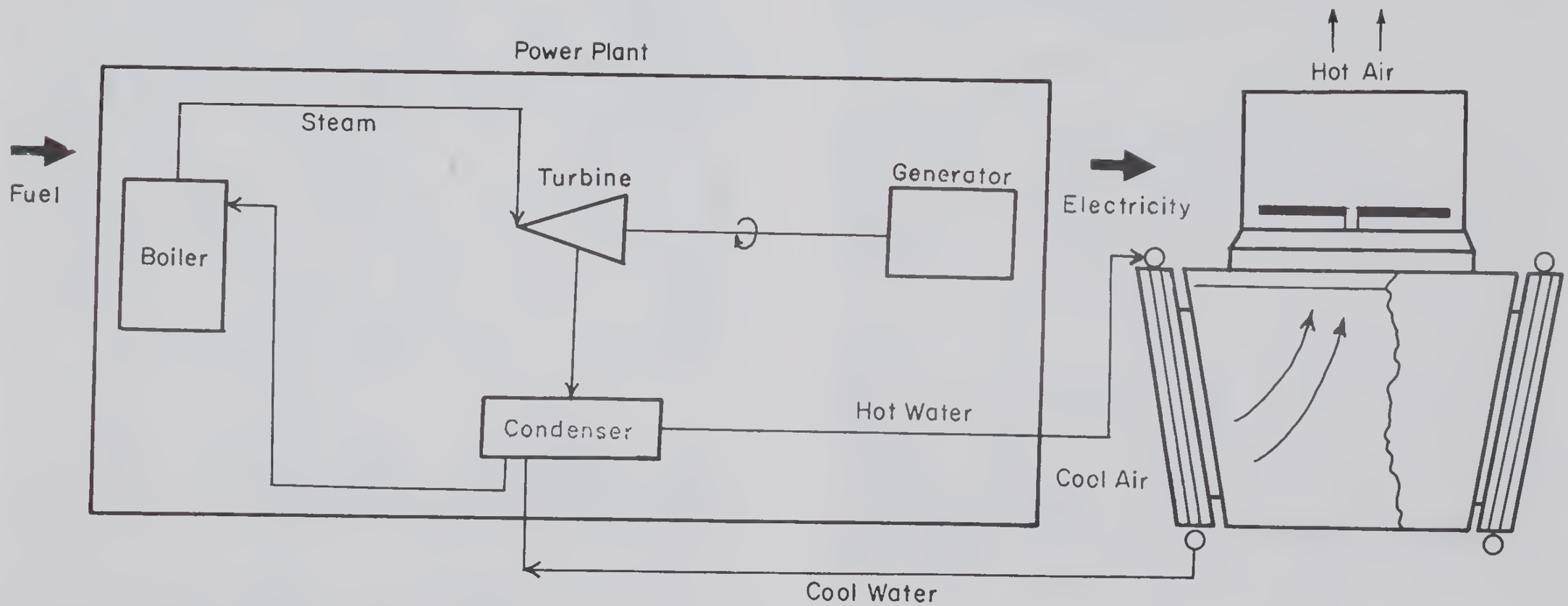

FIGURE 7-6 MECHANICAL DRAFT DRY COOLING TOWER

accomplished by dry towers. The approach for a dry tower is thus the difference between dry bulb temperature and the cold water outlet temperature. The approach for the dry tower is limited by a series of thermal resistances across the water film at the tube wall, the wall itself, and the air film outside the tube wall. In practice a minimum approach of 25 to 30°F can be achieved because of these thermal resistances.

If a dry cooling tower were designed for removal of the entire plant heat load for the Colstrip complex with the proposed turbine and condensers, and with the given heat load and coolant flow rates, the resultant condensing steam temperature would be about 152°F. This is based on a dry bulb temperature of 90°F, an approach of 2.5°F, a range of 32°F, and a terminal temperature difference of 5°F. This is consistent with the finding by Rossie (1970) that economically optimum dry cooling towers usually have an initial temperature difference (ITD), or condensing temperature minus dry bulb temperature, of about 60°F. The corresponding turbine back pressure would be about 8 inches of mercury, and this is well above the 5.5 inch maximum capability of the proposed turbine generator.

To maintain turbine back pressure below 5.5 inches of mercury with a 60 °F ITD tower, the ambient air temperature could not exceed about 78°F. When the summer temperatures exceeded 78°F (about 630 hours per year at Colstrip), either supplemental cooling would be required or significant reduction in plant output would result. Dry cooling system reliability, in the sizes presently under consideration, is questionable since operating experience with dry cooling is very limited, and scale-up to the needed size level has not been done in the past.

To date, no large dry cooling towers have been constructed in the United States. The largest currently in operation in the United States is located at a 20 megawatt fossil-fuel generating plant in Wyodak, Wyoming, and the largest one in operation worldwide is located at a 200 megawatt fossil-fuel generating plant at Grootsvli, South Africa. Several additional units of approximately this same capacity are said to also be in operation in communist countries. Perhaps the most operating experience is available from a 120 megawatt installation in Rugeley, England which has been in operation since 1962. A 150 megawatt unit was also installed in Ibbenbiiren, Germany in 1967. A dry cooling system has been designed for the new 330 megawatt plant of the Black Hills Power and Light Company located at Gillette, Wyoming. This system is based on the direct dry cooling tower scheme. To make the system operable on very hot days, supplemental spray cooling with some water consumption is required.

In addition to the lack of advancement of the state of the art for construction of large dry cooling towers, other serious problems are also evident. Dry cooling towers are susceptible to freezing because of low flow within the tubing due to flow imbalance of startup, shutdown, or low-load conditions. Corrosion and fouling are likely to be major problems with the small diameter tubing. It is possible that certain types of debris in the air stream could cut off air flow to portions of the tubing.

Estimates of size and performance characteristics of the Colstrip power plant can be used to evaluate the potential environmental and economic costs of dry cooling systems. Both direct and indirect systems were considered. For a typical 60°F ITD dry cooling tower an increase in air temperature of about 35°F would be expected. The dry cooling system would then require a sufficient number of fan cells and horsepower to induce the needed air flow through the system to dissipate the heat. About five times the air required for the mechanical draft evaporative towers would be necessary. Thus, the equivalent of about 225 fan cells would be needed for dry cooling. Although this would represent significantly more land area than for evaporative towers, this is still a small fraction of total plant land area. The land required, system capital costs, and operating auxiliary power are determined on the basis of 225 fan cells.

Power plant efficiency and plant electrical generation capacity are strongly affected by the use of a dry cooling system. Dry cooling will produce high condensing temperatures and correspondingly high exhaust pressures for turbine operation. The increase in exhaust pressure will increase the turbine cycle heat rate, since less work is accomplished for the same flow of steam through the turbine, and will also decrease the amount of work accomplished by the turbine, assuming constant steam flow.

For a typical dry cooling tower design with a 60°F ITD, the base-load production capacity of the Colstrip complex would be impaired considerably. The condensing temperature and corresponding turbine back pressure will exceed the expected values for mechanical draft evaporative cooling when the ambient dry bulb temperature is over 65°F. At 78°F ambient temperature, the turbine back pressure would be 5.5 inches mercury. At this point, the turbine would be operating at the performance capability limit, but at reduced efficiency.

For temperatures in excess of 78°F, three options would have to be considered. First, the plant operating load could be reduced to meet the capability of existing turbine designs. Second, a high back pressure could be used, but this also leads to corresponding capacity losses in power production at all ambient temperatures. Also, no high back pressure turbines have been available in the United States until very recently, although they have been available in Europe for several years. As a result, little operating experience for high back pressure turbines is currently available. Additionally, any change in turbine design at this point would result in a considerable delay in plant construction. A third alternative would be to redesign the plant at lower efficiency levels to meet the desired base-load. This would result in higher initial and operating costs for the entire plant.

The major incentives for use of dry cooling are that it consumes little, if any, water and emits no water vapor plume (although there is a dry heat plume which can have some adverse effects), since there is no evaporation in the system. Dry cooling system performance and reliability are mostly unknown. The technology of dry cooling has not been demonstrated in comparably large units, and in most applications special modified turbine designs would have to be devel-

oped to accomodate the high back pressure. Dry cooling will be attractive only when water availability constraints are severe and significant net power generation losses can be accepted.

7.1.1.7. Hybrid Wet-Dry Cooling Tower

For plant sites which have some water available but not a sufficient amount for totally wet cooling, a hybrid wet-dry cooling tower is a possible alternative. The features of both evaporative cooling and dry cooling are combined in the wet-dry cooling tower. By varying the balance of wet and dry cooling, a wide spectrum of design and performance characteristics can be achieved. On one hand, the system can be basically a wet cooling tower with supplemental dry cooling to reduce or eliminate pluming and fogging. On the other hand, water consumption can be reduced by operating it as a dry tower with supplemental evaporative or wet cooling. This makes the system operable when dry cooling alone would result in exceeding condenser back pressures. Although air flow through the tower may be induced by fans or natural draft, only the mechanical draft system is considered here, since local atmospheric conditions are not favorable to controlled natural draft performance. Figure 7-7 presents a schematic of this system.

A mechanical draft wet-dry cooling tower incorporates a finned tube heat exchanger in the dry section and a conventional evaporative cooling tower section. Air flowing around the finned tubes removes heat from the water by conduction and convection. All cooling is sensible, and no evaporation occurs. The configuration of the wet-dry cooling system allows great flexibility in tower design either to reduce or eliminate visible vapor plumes or to significantly reduce water consumption.

Two types of hybrid wet-dry cooling systems are available: (1) the Marley wet-dry parallel path system and (2) the Westinghouse series flow wet-dry system. Both designs allow increased use of evaporative cooling in the summer months to maintain low turbine exhaust pressures and dry cooling in the winter months to prevent visible plume formation.

In the parallel path system, ambient air is drawn through each of the dry and wet sections. The heated dry air from the finned tubes mixes within the tower with the warm moist air from the wet section, significantly diluting the moisture content in the discharged air. This dilution process reduces the potential for creating a condensation plume, and may even eliminate it, depending upon the dilution ratio. The water consumption rate can also be reduced by the relative proportioning between the wet and dry sections of the tower cooling system.

In the series flow system ambient air is drawn through both the dry and wet sections in series, first around the finned tubes and then through the wet section. Since the heated air from the finned tubes can hold more moisture without saturating the air than can the ambient air, the visible vapor plume can be reduced or eliminated completely. The water flow is divided between the wet and dry sections of the tower to achieve the desired relative portions of wet and

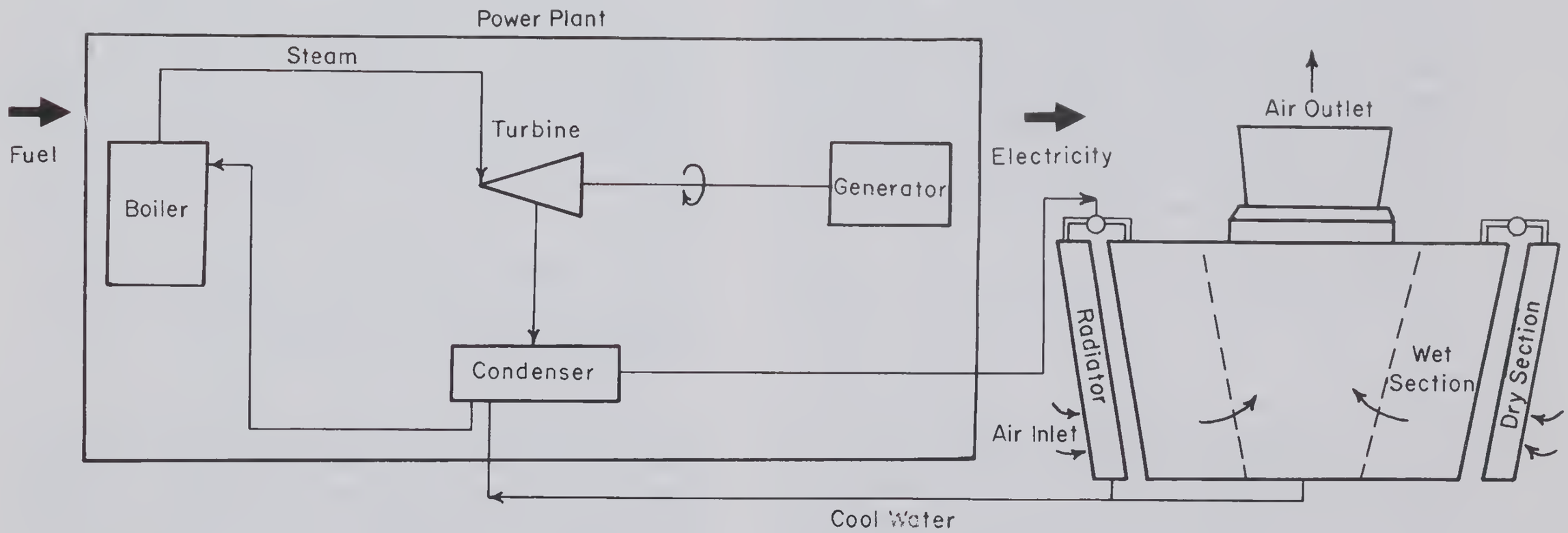

FIGURE 7-7 HYBRID WET-DRY TOWER

dry cooling. The water is then mixed and returned to the condensers.

The addition of a finned tube heat exchanger section to a wet cooling tower increases costs for purchase, construction, and maintenance, as well as requiring increased fan sizing and fan operation horsepower. The drift characteristics are similar to those of other cooling tower systems when the evaporative portion of the tower is in operation. The major advantages of the mechanical draft wet-dry cooling tower system are plume elimination or reduction, reduced water consumption, and operating flexibility. The tower, for example, could be operated for conventional wet cooling over most of its life and supplemented with wet-dry operation as needed.

While hybrid wet-dry cooling is relatively new and untested, its technology is a rather simple adaptation of proven evaporative cooling tower system and dry cooling tower system technologies. The mechanical draft wet-dry cooling tower system is a plausible alternative for the Colstrip complex. A wet-dry system designed for plume reduction would require about three towers with a total of 50 to 60 cells. A hybrid system composed basically of dry cooling with supplemental wet cooling for minimal water consumption would require approximately 200 fan calls. Lesser degrees of reduced water consumption could be achieved by varying the balance in the wet-dry combination. The major incentive for using a wet-dry cooling system at Colstrip would be to minimize water consumption.

7.1.1.8. Combined Dry Tower-Cooling Pond

An additional power plant heat rejection system which has been proposed is a dry cooling tower operated in conjunction with a cooling pond. This could possibly enable the use of a dry cooling tower within the size range of existing technology, and could also eliminate the summer capacity reduction problems. As in the hybrid wet-dry system, a combined dry tower-cooling pond system could be arranged to reject heat to the ambient air when the process stream is at a high temperature. When the process stream approaches the ambient dry bulb, the stream could be switched to an evaporatively cooled section to take advantage of the greater driving potential provided by the ambient wet bulb. Proper proportioning of the thermal duty between the dry and the evaporative sections can result in a combined system which provides heat rejection more economically than either an all-dry or an all-evaporative system separately.

A detailed study of this type cooling system by Gupta and Gorton was based on the assumptions that the plant is operated at full load under summer design conditions and that the combined system is to be compared to a total dry system with cooling requirements typical of those under which dry systems are proposed to operate. This approach gives no credit to cycle efficiency improvement possible from lower temperature cooling water available from evaporative pond systems. However, neither is compensation included for operating flexibility and opportunity for water conservation gained by use of the combined system. Results of this study indicate that savings for a combined dry tower-cooling pond system are

likely to be from 3 to 15% of the cost of entirely dry cooling or total cooling pond heat rejection. Thus, this cooling scheme does not result in a significant economic advantage over the two separate systems.

7.1.2. Alternative Emission Control Systems

Due to the amounts of coal burned in large fossil-fuel plants, the potential for atmospheric pollution is great. Therefore, to protect the atmosphere and to meet various regulations, emission control systems must be utilized. The following sections discuss in detail alternative emission control systems.

7.1.2.1. Hot Electrostatic Precipitators

Electrostatic precipitators (see Figure 7-8) apply high voltage charges to suspended particles in the gas stream, collect these particles on plates and remove the precipitated material to external receptacles or hoppers. The gas stream is not deflected or disturbed as much as in mechanical collectors, and this results in a low draft loss of the electrostatic device. This type of unit is effective on a wide range of particle sizes and can achieve collection efficiencies well above 90%. However, the unit is also relatively expensive running approximately 25 to 35 $/KW of unit installed capacity. This would represent about 25 million dollars per unit at Colstrip.

Normally, an electrostatic precipitator in a fossil-fuel power plant would be installed downstream of the combustion gas preheaters where the temperature of the gas is 200 to 350°F. At this temperature SO_2 or some other gas must be present in the gas stream in sufficient quantity to make the gas suitably conductive for the precipitator to function efficiently. If there is insufficient sulfur in the coal, as is the case in Colstrip, then a gas such as ammonia must be mixed with the flue gas or the precipitator must be located upstream from the preheater where the temperature is 700°F or higher. Such temperatures make the gas mixture conductive enough to ensure 99% particulate removal. Hot precipitators have been successfully operated on low-sulfur coal-fired power stations and could be expected to function well in removing particulates from the combustion gas at the Colstrip complex. However, sulfur dioxide would not be removed by this process. Likewise, any trace elements in gaseous form would not be removed by hot electrostatic precipitators.

7.1.2.2. Wet Electrostatic Precipitators

Although the previous alternative provides for effective particulate removal, sulfur dioxide would not be removed from the combustion gas. A wet electrostatic precipitator would both remove SO_2 and particulates. Also, since the water vapor would make the gas mixture conductive, the unit could be placed downstream from the preheater.

Sulfur dioxide removal is effected as the SO_2 combines with the slurry. These slurry droplets, together with the particulates, adhere to the charged plates and are washed by a continuous

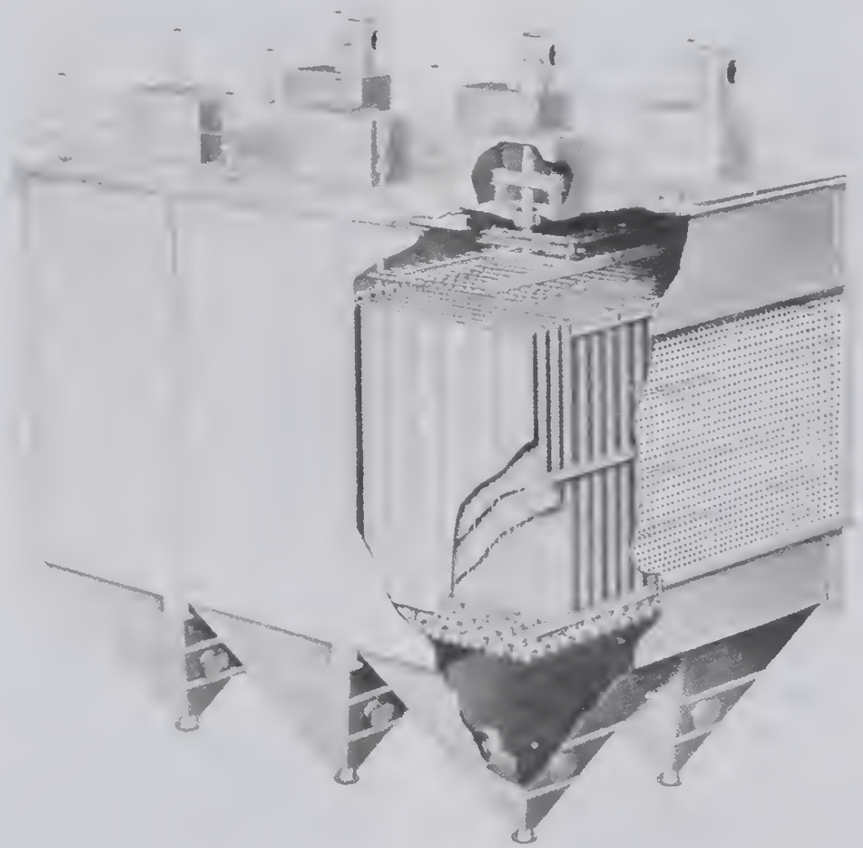

HOT ELECTROSTATIC PRECIPITATOR

FIGURE 7-8

spraying action into a hopper located beneath the plates.

Wet precipitators provide less resistance to the flow of combustion gas than conventional venturi or fluidized bed scrubbers. It is necessary, however, to reheat combustion gas to give it sufficient buoyancy to rise in and above the stack. A second disadvantage is the very high water vapor content of the gas. In addition, the wet precipitators have not been sufficiently pilot plant-tested to be considered ready for use at Colstrip. Cost figures are not available for this system at present.

7.1.2.3. Bag Filters

This industrial gas cleaning process (shown in Figure 7-9) uses fibers in woven or felted fabrics in the form of tubular or flat filters. In this filtration process, a filter cake is generally formed, which itself acts as the filter medium. After a specified pressure loss occurs in the fiber filter, the filter cake is removed by a suitable technique. The filtration process is then recommenced and is repeated periodically. These types of filters, known as bag filters, would provide the highest particulate removal efficiency of all alternatives. Although they cannot be used continuously above 500°F, the temperature of the combustion gas after it passes through the preheaters should be considerably below this value.

Bag filters have not been extensively used in power plants because of their higher resistance to gas flow over electrostatic precipitators and their requirements for large areas of land. Such a system for a 700 MW unit might be 65 ft. high, 90 ft. wide and 300 ft. long. The installation cost would be about 25 $/KW or 18 million dollars per unit at Colstrip. Bag filters are an attractive alternative where low sulfur coal makes conventional precipitators perform poorly. The amount of sulfur in the coal is directly related to the conductivity of the gas mixture in which the particles are suspended. If there is not enough sulfur, the particles are not charged properly for removal. As with hot electrostatic precipitators, only particulate removal is effected. A separate system would have to be used for removing gaseous emissions from the stack effluent.

7.1.2.4. Centrifugal Separators

Most centrifugal separators depend upon the centrifugal effect of many small radius turns in the stream of dust laden gas and on the cyclone effect. Some separators incorporate multiple vertical tubes where both effects are utilized. Others use large cyclones with recirculation fans and ducts. Efficiency is closely related to particle size, and increased efficiency can usually be obtained only at the expense of increased draft loss.

Centrifugal separators would be the least expensive of the various continuous cleaning alternatives. However, a removal efficiency of over 95% is possible only when particle size is above 40 microns. Most of the fly ash particles

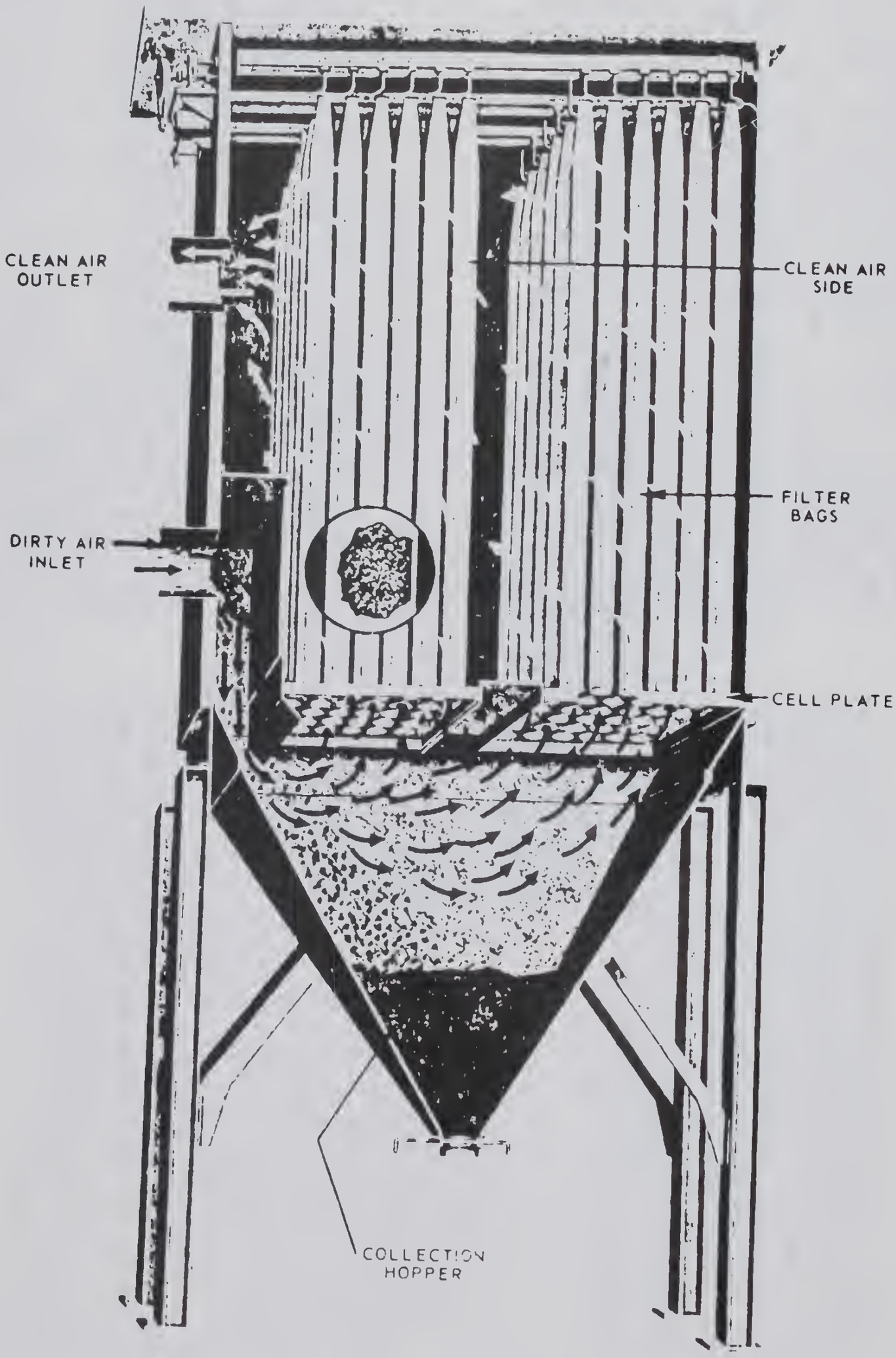

TYPICAL BAG FILTER

FIGURE 7-9

at Colstrip will be below 5 microns, and for particles this small the collection efficiency of a cyclone, even with gas velocities approaching 100 ft/sec, is only between 70 and 80%. Thus, cyclone separators are not considered adequate for the particulate removal system. Two types of centrifugal separators are shown in Figures 7-10 and 7-11.

7.1.2.5. Boiler Injection Sulfur Removal Systems

In any process for removing sulfur oxides from waste gases where some material is introduced into the gas stream to combine with the oxides and convert them to a removable liquid or solid for discard, the added material must be quite inexpensive. One commonly used material is limestone, defined herein as a naturally occurring material made of calcium carbonate plus various amounts of other substances. Dolomite is a form of limestone composed of about half calcium carbonate and half magnesium carbonate. Limestone is a very widespread natural material, occurring in most parts of the world and usually available in the vicinity of plants that emit sulfur oxides. Surface mining is normally feasible. The combination of low-cost mining and proximity to plants usually makes the delivered cost quite low.

The several ways that have evolved for using limestone can be divided into two major classes, dry and wet systems. In the dry systems, the limestone (as is or calcined) is injected into the gas and then recovered downstream after reaction with the sulfur oxides. Hence equipment both for injection into the gas and for subsequent removal is required. Limestone reacts well with SO_3 in the dry state but not with SO_2. Even if the limestone is calcined to CaO, which is usually much more reactive than $CaCO_3$, little reaction takes place with SO_2 at ordinary temperature. If the CaO is hydrated to $Ca(OH)_2$, however, good sorption can be obtained at low temperature. At high temperature, on the order of 1800°F, both $CaCO_3$ and CaO are reactive with SO_2. At this temperature, however, the $CaCO_3$ becomes calcined rapidly to CaO so that the reacting species may be CaO even if limestone is the material injected.

Calcination of limestone by normal means in a lime kiln, followed by hydration to make it reactive at lower temperature, is an expensive operation. Therefore, discussion will be limited to the dry system because it has been applied mainly to power plants, where injection into the boiler furnace makes it possible to calcine the limestone at little cost. There is no equipment cost other than for grinding and injecting, and fuel and labor costs are relatively low as compared to separate calcination. From this it would appear that the low cost should make the limestone dry system a very promising solution to the SO_2 problem. There are, however, some serious disadvantages.

First, the degree of SO_2 absorption is relatively low because of the very short retention time in the boiler and difficulty in getting SO_2 penetration into the limestone particles beyond the surface layer. Excess limestone can be used to increase SO_2 removal, but even with a large excess a high degree of removal is

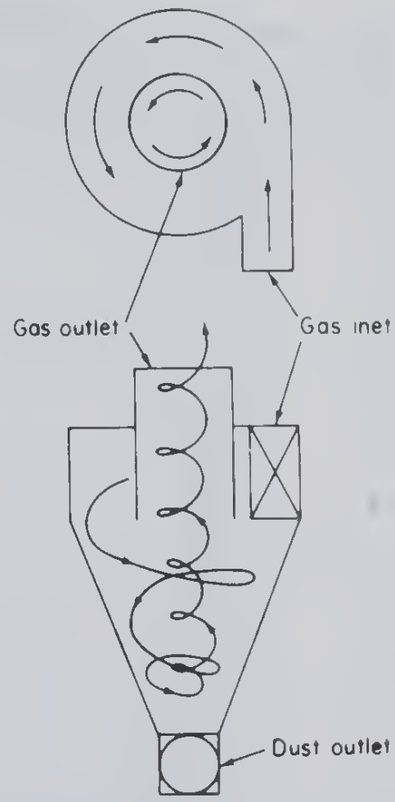

FIGURE 7-10 TANGENTIAL INLET CYCLONE

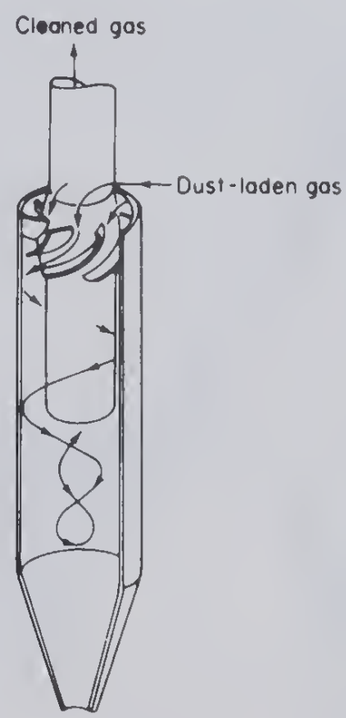

FIGURE 7-11 AXIAL INLET CYCLONE

difficult to attain. A second major disadvantage is that reaction of lime with ash in the boiler may cause fouling. Finally, unreacted lime in the gas stream reduces efficiency of the electrostatic precipitators normally used in power plants to remove fly ash from the gas. Therefore, precipitator capacity must be increased considerably more than would be necessary merely to handle the additional solids.

In summary, several systems for reducing SO_2 levels by injecting various forms of lime or dolomite directly into the furnace have been developed. Although this is an effective way of removing sulfur, problems with the combined lime and sulfate adhering to furnace and heat exchanger surfaces have necessitated frequent shutdowns. Also, an electrostatic precipitator or other particulate collector would have to be installed to remove the fly ash and the calcium sulfate from the flue gas. Because of its unreliability this process is not recommended.

7.1.2.6. Sulfur Recovery Systems

Although it is highly unlikely that SO_2 recovery from dilute gases will ever be a profit-making operation in the usual commercial sense, the recovery route is still preferable if it loses less money than throwaway operation costs. However, an economic stand-off in this respect would not be enough to justify choosing recovery. Since the throwaway approach frees the producer from the problems of higher capital outlay and of product marketing, recovery must have some degree of financial advantage to compete with the throwaway.

Several companies have been developing systems which would not only remove sulfur from the flue gas but would yield a saleable sulfur product. These systems are considerably more expensive than the conventional systems and have not yet been as reliable. Even though sale of the sulfur would offset some of the costs, the utility would be in the position of having to operate a chemical production facility and of having to market its product. Again, many of these systems require separate particulate removal systems.

7.1.2.7. Wet Alkali Scrubbers

Wet scrubbers have been proposed by the applicant companies and are designed to remove almost all of the fly ash and most of the SO_2 from stack gases. The proposed system is shown schematically in Figure 7-12. The combustion gas is forced through a combination of contacting devices containing alkaline solutions. As the fly ash becomes entrained in the slurry, it is removed from the gas stream. The SO_2 is also absorbed in the alkaline solution where it forms relatively insoluble salts which can be removed from the solution. Alkaline solutions based on sodium, potassium, calcium, or magnesium salts can be used.

Three scrubber systems have been considered for the combined removal of fly ash particulates and SO_2 . Each was designed to satisfy emission control standards. To bring stack gas SO_2 concentrations within allowable emission levels, however, each system requires a front-end alkali handling system as well as a larger back-end

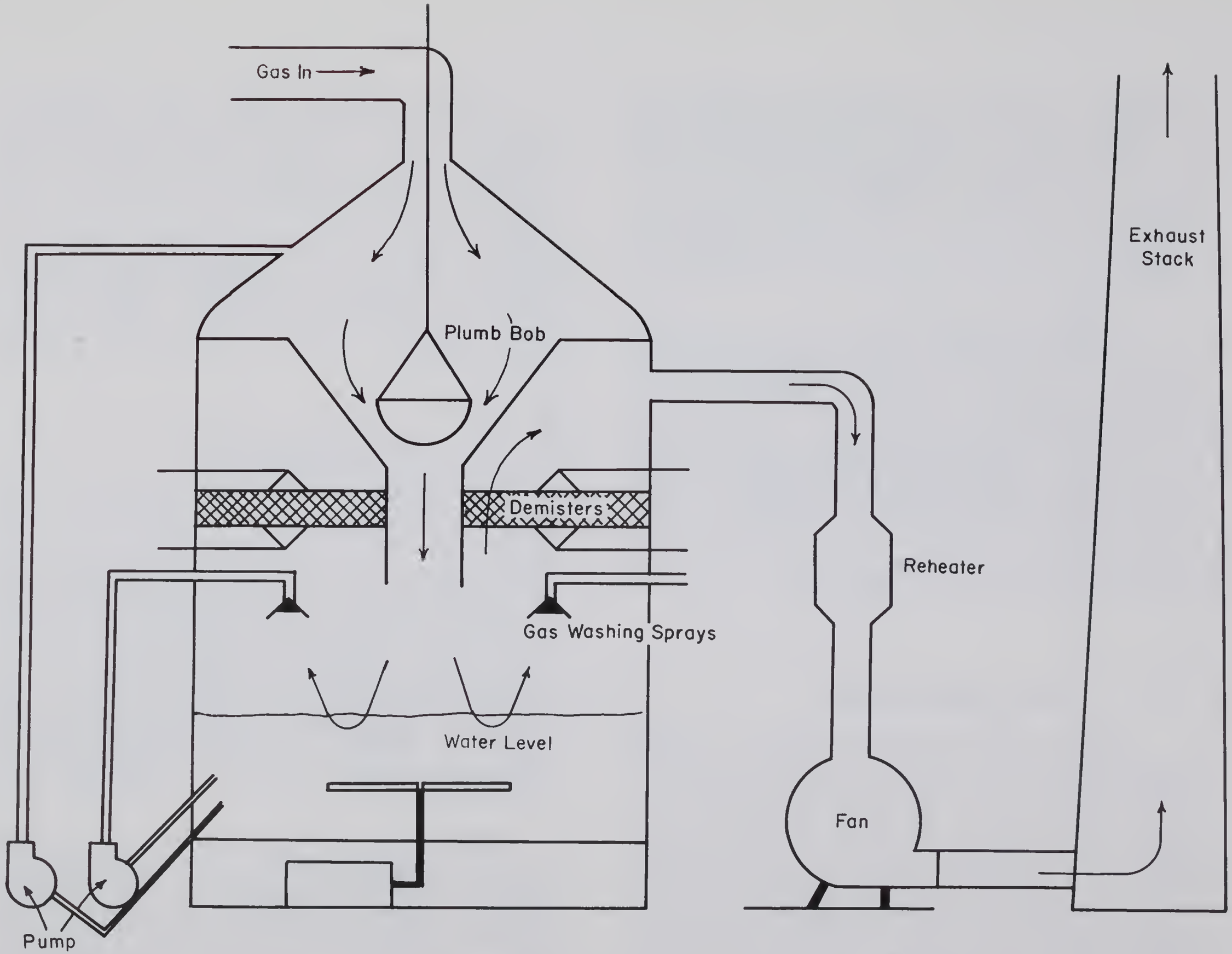

FIGURE 7-12 WET ALKALI SCRUBBER

disposal facility to handle the increased solids which are carried out with the fly ash.

The first of these schemes consists of removing fly ash by a high efficiency electrostatic precipitator and reducing SO_2 by scrubbing a partial stream of flue gas in SO_2 absorbers using an alkali solution. After scrubbing, the treated gas stream is recycled by recombining it with the untreated stream for further cleaning.

The second scheme consists of removing fly ash by a mechanical dust collector and reducing the SO_2 and remaining fly ash by scrubbing the total flue gas stream in venturi scrubbers with an alkali solution. Two alternatives are available with this scheme. First, the induced draft fan may be located upstream of the venturi scrubbers so they are under a slight pressure. Alternatively, the induced draft fan may be located downstream from the scrubbers so they are under a slight vacuum.

The third of these schemes consists of removing fly ash and reducing SO_2 by scrubbing the total flue gas in single stage venturi scrubbers. A slurry of fly ash with a high level of available alkali, supplemented by soda ash solution, is used for scrubbing. This is the system which has been proposed.

It is expected that the proposed scrubber system will be composed of seven venturi scrubber trains to handle flue gas from each 700 megawatt generating unit. The seven scrubber trains, each of which could handle 16.67% of the total flue gases per unit, represent a 16.67% excess capacity for scrubbing. Therefore, if one scrubber goes down or out of service for some reason, the unit could continue to operate at full load. If, however, more than one scrubber would be out of commission then the unit would have to reduce load to continue operation. The estimated cost for this proposed system is approximately 40 to 60 $/KW for each unit. This represents 28 to 42 million dollars per unit. Each scrubber train consists of a venturi scrubber, reheater, induced draft fan, and associated ductwork and piping. Each provides two contacts between liquor and gas streams for optimum removal of both fly ash and SO_2. The first contact occurs in the venturi throat section and is of cocurrent flow type. The second contact occurs in the separator section and is of the counter-current flow type. Basically, all the fly ash removal and partial SO_2 removal is accomplished in the throat section. The counter-current spray sections optimize SO_2 removal. The bleed from the seven trains is combined and pumped to an ash pond.

A portion of the total flue gas containing fly ash and sulfur oxides enters the throat of the venturi scrubber where it is contacted with recycle liquor containing a slurry of fly ash and calcium salts. The accelerating flue gas shatters the curtain of liquor into small droplets which trap the dust particles and provide a mass transfer surface for the absorption reagent resulting in fly ash and some sulfur dioxide removal.

More complete sulfur dioxide removal is accomplished by scrubbing the flue gas with an alkaline solution of water and calcium salts. If the available alkali of the fly ash is too low, additional alkali will be added in the form of soda ash or lime. The gaseous sulfur dioxide reacts chemically with the alkaline solution to

produce calcium or sodium sulfite and other salts. At the same time the mechanical action of the scrubber traps any remaining fly ash particles in the water droplets. Recirculation within the scrubber system makes the alkalinity in the ash available for the process.

The cleaned flue gas will then enter a chevron-type mist eliminator where entrained liquor droplets will be removed. A spray washing system, both above and below the mist eliminator, will prevent any significant build-up of scale on the eliminator. The used scrubber solution, newly formed salts and trapped fly ash, will be piped to the ash pond.

The overall emission control system is guaranteed by the manufacturer to limit the sulfur dioxide emission to one pound SO_2 per million BTU and the fly ash emissions to 440 pounds of particulate per hour per unit.